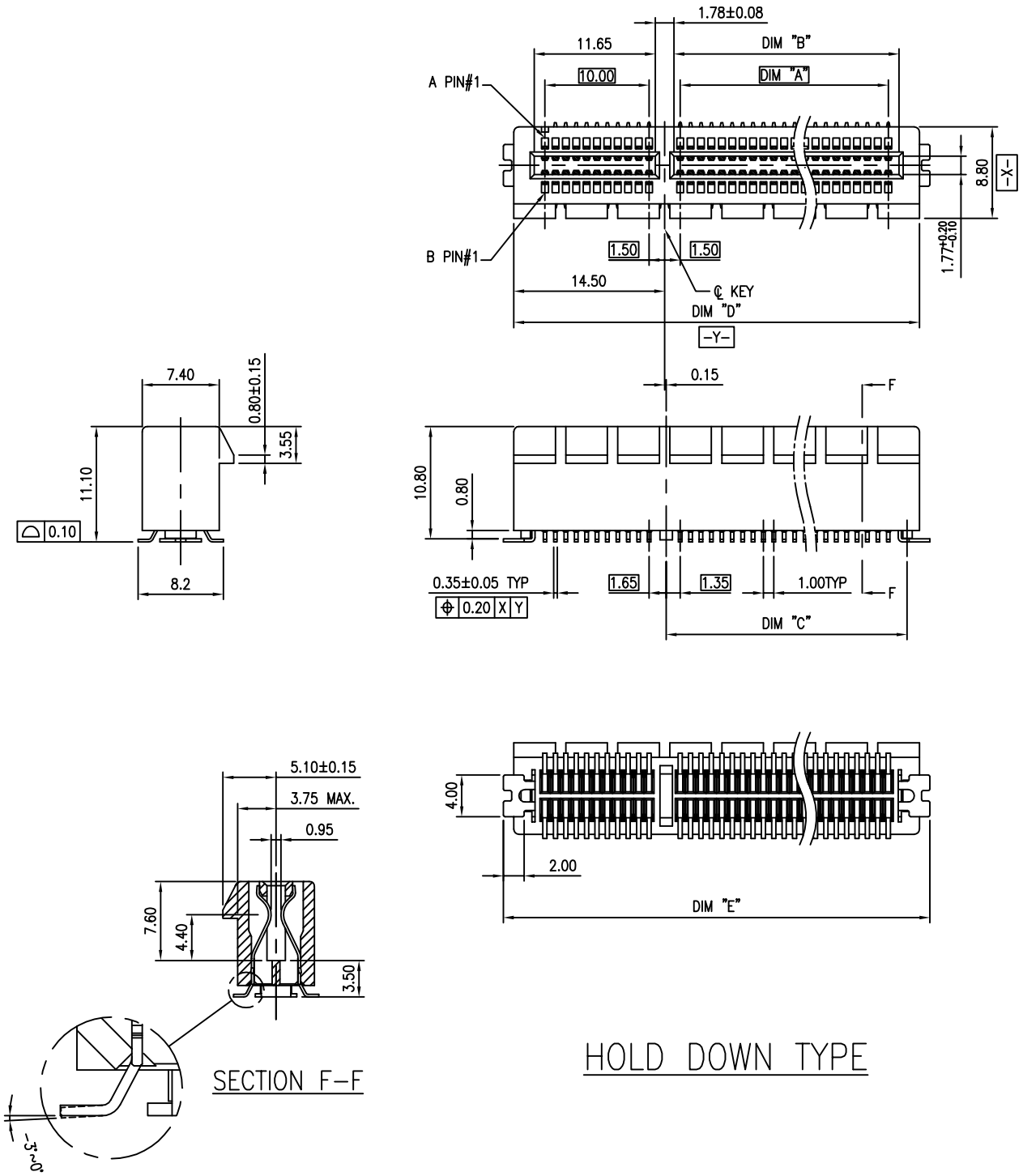

mat'l. code				surface 58 ISO 1302	tolerance ISO 406 ISO 1101	projection	product family PCI_EXPRESS
ltr	ecn no	dr	date	tolerances unless otherwise specified			title
A	T04-0004	RC	02/05/'07	angles	linear .X±.3	MM	PCI_EXPRESS_CARD_EDGE
B	T07-1083	RC	05/25/'07		.XX±.20		POST-FREE_ASSEMBLY(SMT)
C	DG-007885	HT	11/14/'11	0°±2°	XXX±.10	scale 1	
D	DG-009560	HT	01/16/'12	dr	RICHARD_CHIU 01/30/'07		dwg no 10076266 sheet 1 of 6 size A4
E	ELX-DG-13973	WL	01/31/'13	engr	RICHARD_CHIU 01/30/'07		
				chr	PAUL_WANG 01/30/'07		
				appd	JOSEPH_HSIA 01/30/'07		type CUSTOMER Drawing

sheet index	revision	E	A	A	E	A	A
	sheet	1	2	3	4	5	6

FCIconnect.com
Copyright FCI

form: A4

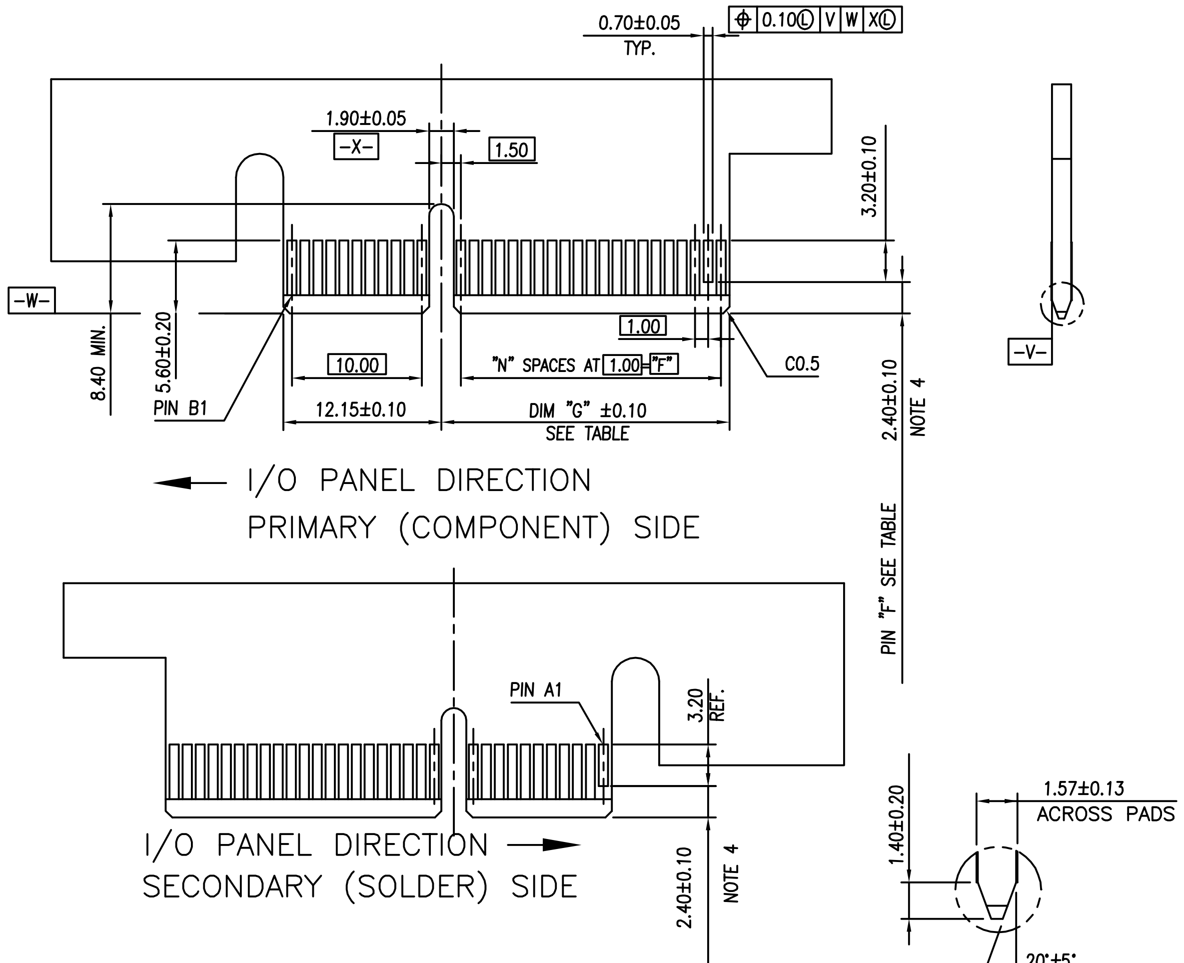

# POS REF.	N	DIM "G"	DIM "F"	"F"
36	6	8.15	6.00	B17
64	20	22.15	20.00	B31
98	37	39.15	37.00	B48
164	70	72.15	70.00	B81

ADD-IN CARD EDGE-FINGER DIMENSIONS

mat'l. code: –	surface: 58 √ ISO 1302	tolerance: ISO 406 ISO 1101	projection	product family: PCI_EXPRESS	
ltr / ecn no / dr / date: A / – / – / –	tolerances unless otherwise specified			title: PCI_EXPRESS_CARD_EDGE POST-FREE_ASSEMBLY(SMT)	
	angles: 0°±2°	linear: .X±.2 .XX±.13 XXX±.05	MM		
			scale 2		
	dr: RICHARD_CHIU 1/30/'07			dwg no: 10076266	sheet 2 of 6 / size A4
	engr: RICHARD_CHIU 1/30/'07				
	chr: PAUL_WANG 1/30/'07				
	appd: JOSEPH_HSIA 1/30/'07			type: CUSTOMER Drawing	
sheet index	revision A / sheet 2				

FCIconnect.com
Copyright FCI
form: A4

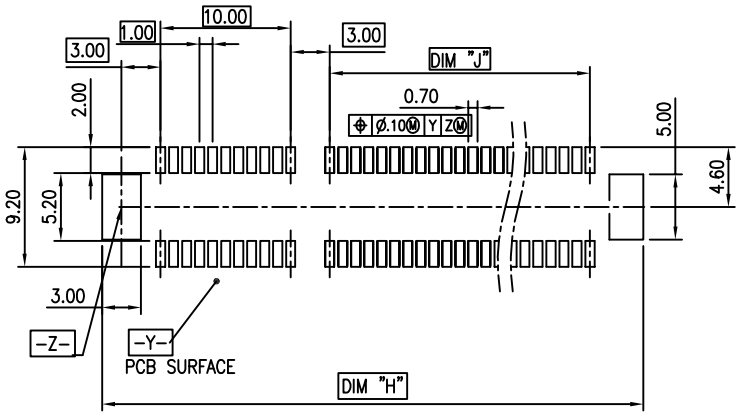

RECOMMENDED PCB LAYOUT, PAD TYPE

DIMENSIONS							
POSITION	A	B $^{+0.15}_{-0.05}$	C ±0.20	D ±0.23	E ±0.20	H ±0.10	J
36	6.00	7.65	9.15	25.00	27.00	28.00	6.00
64	20.00	21.65	23.15	39.00	41.00	42.00	20.00
98	37.00	38.65	40.15	56.00	58.00	59.00	37.00
164	70.00	71.65	73.15	89.00	91.00	92.00	70.00

POSTION OF CAP

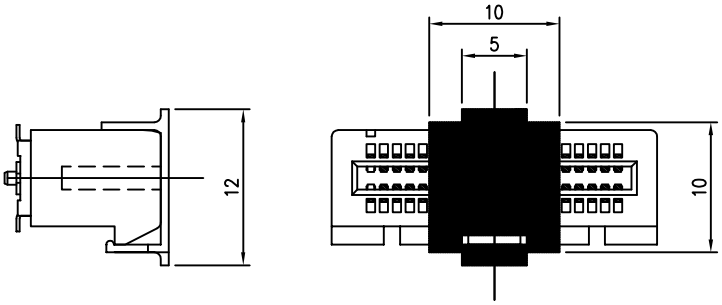

FCIconnect.com
Copyright FCI

mat'l. code –				surface ISO 1302 58	tolerance ISO 406 ISO 1101	projection	product family PCI_EXPRESS
ltr	ecn no	dr	date	tolerances unless otherwise specified			title
A	–	–	–	angles	linear .X±.2	MM	PCI_EXPRESS_CARD_EDGE
					.XX±.13		POST-FREE_ASSEMBLY(SMT)
				0°±2°	XXX±.05	scale 2	
				dr RICHARD_CHIU	1/30/'07		dwg no 10076266 sheet 3 of 6 size A4
				engr RICHARD_CHIU	1/30/'07		
				chr PAUL_WANG	1/30/'07		
				appd JOSEPH_HSIA	1/30/'07		type CUSTOMER Drawing
sheet index	revision sheet	A 3					

form: A4

NOTES:

1.MATERIAL:

HOUSING: NYLON, GLASS FILLED UL94V-0 RATE, SUITABLE FOR IR SOLDERING.

TERMINAL: COPPER ALLOY

PLATING: 50u" NICKEL UNDERPLATE ALL OVER
CONTACT AREA PLATING - SEE PRODUCT NUMBER CODE
SOLDER TAIL: TIN 100u" OVER 50u" NICKEL

METAL PADS: COPPER ALLOY
FINISH: 100u" TIN OVER 50u" NICKEL

2.PRODUCT SPECIFICATION: GS-12-390

③THE HORIZONTAL AXIS FOR THE PAD PATTERN IS ESTABLISHED BY THE CENTER LINE OF THE PAD LENGTH.
THE VERTICAL AXIS IS 90° TO THE HORIZONTAL AXIS, THROUGH THE CENTER OF DATUM -Z-

④NO TIE BAR PERMITTED FROM CARD EDGE TO LEADING EDGE OF PAD FOR PINS A1.

⑤CHAMFER EDGES MUST BE FREE OF CUTTING BURRS.

7.RoHS COMPATIBLE PRODUCT SPECIFICATIONS

a - PLATING:
- "LF" MEANS THE PRODUCT IS LEAD-FREE, 2um MINIMUM MATTE TIN OVER 1.27um MINIMUM NICKEL UNDERPLATE.

b - MANUFACTURING PROCESS COMPATIBILITY
- THE HOUSING WILL WITHSTAND EXPOSURE TO 260°C±5°C PEAK TEMPERATURE FOR 5 SECONDS IN A CONVECTION, INFRA-RED OR VAPOR PHASE REFLOW OVEN.

PRODUCT NUMBER CODE

10076266-X X X X L F

HOUSING COLOR OPTIONS
1-BLACK

TERMINAL PLATING OPTIONS
0-50u" Ni UNDERPLATE
30u" Au CONTACT AREA
100u" TIN TAIL AREA ----- COMPATIBLE RoHS
1-50u" Ni UNDERPLATE
15u" Au CONTACT AREA
100u" TIN TAIL AREA ----- COMPATIBLE RoHS
2-50u" Ni UNDERPLATE
GOLD FLASH CONTACT AREA
100u" TIN TAIL AREA ----- COMPATIBLE RoHS

POS OPTIONS
0-36
1-64
2-98
3-164

PACKAGING OPTIONS
T-TRAY PACKAGING WITHOUT CAP
R-TAPE & REEL PACKING WITHOUT CAP (FOR 36P&64P OPTIONS ONLY)
P-TAPE & REEL PACKING WITH CAP (FOR 36P&64P OPTIONS ONLY)
C-TRAY PACKAGING WITH CAP
M-TAPE&REEL WITH MYLAR(36P&64P OPTION ONLY)
F-HARD TRAY PACKAGING WITH CAP (164P ONLY)

LEAD FREE

FCIconnect.com

Copyright FCI

ltr	ecn no	dr	date
E	-	-	-

mat'l. code: -
surface: ISO 1302 58
tolerance: ISO 406 ISO 1101
projection
product family: PCI_EXPRESS
tolerances unless otherwise specified
angles: 0°±2°
linear: .X±.2 / .XX±.13 / XXX±.05
MM
scale 2
title: PCI_EXPRESS_CARD_EDGE POST-FREE_ASSEMBLY(SMT)

dr	RICHARD_CHIU	1/30/'07
engr	RICHARD_CHIU	1/30/'07
chr	PAUL_WANG	1/30/'07
appd	JOSEPH_HSIA	1/30/'07

dwg no 10076266
sheet 4 of 6
size A4
type CUSTOMER Drawing

sheet index	revision	C
	sheet	4

form: A4

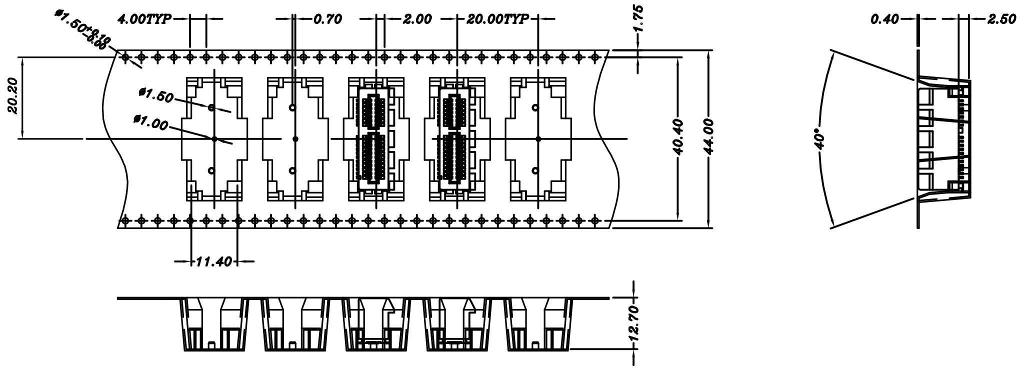

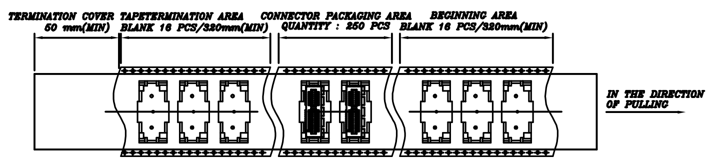

COMPOSITION OF PACKAGING

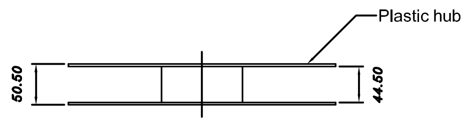

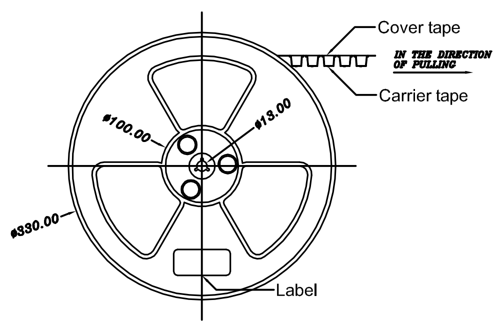

TAPE AND REEL
PACKING
RECOMMENDED FOR
36PINS ONLY

mat'l. code —				surface ISO 1302 58	tolerance ISO 406 ISO 1101	projection	product family PCI_EXPRESS
ltr	ecn no	dr	date	tolerances unless otherwise specified			title
A	—	—	—	angles	linear .X±.3	MM	PCI_EXPRESS_CARD_EDGE POST−FREE_ASSEMBLY(SMT)
					.XX±.20		
				0°±2°	XXX±.10	scale 1	
				dr RICHARD_CHIU	1/30/'07	FCI	dwg no 10076266 sheet 5 of 6 size A4
				engr RICHARD_CHIU	1/30/'07		
				chr PAUL_WANG	1/30/'07		
				appd JOSEPH_HSIA	1/30/'07		type CUSTOMER Drawing
sheet index	revision A	sheet 5					

FCIconnect.com
Copyright FCI

1 For PCI EXPRESS SMT TYPE 36P ONLY.

2. Material :
- 2.1 Reel :
  - 2.1.1 Plastic hub : High Impact Polystyrene
  - 2.1.2 Cover tape : PE
  - 2.1.3 Carrier tape : ABS
- 2.2 Waterproof bag : PE
- 2.3 Desiccative : Silica Gel
- 2.4 Carton : Corrugated paper
- 2.5 Baffle : E.P.E
- 2.6 Angle paperboard : Corrugated paper

3. Dimension :
- 3.1 Reel :
  - 3.1.1 Plastic hub : Ø330 x T50.5 mm
  - 3.1.2 Cover tape : 5690(L) x 37.4(W) mm
  - 3.1.3 Carrier tape : 5640(L) x 44(W)mm
- 3.2 Waterproof bag : 600(H) x 465(W) x 0.06(T) mm
- 3.3 Desiccative : 25 gram / Package
- 3.4 Carton : 380(L) x 380(W) x 300(H) mm
- 3.5 Baffle (1): 370(L) x 370(W) x 15(H) mm
- 3.6 Baffle (2): 355(L) x 252(W) x 15(H) mm
- 3.7 Angle paperboard : 252(H)

4. Quantity :
- 4.1 250 Pcs / Reel
- 4.2 1250 Pcs / Carton

5. Weight :
- 5.1 N/W :
- 5.2 G/W :

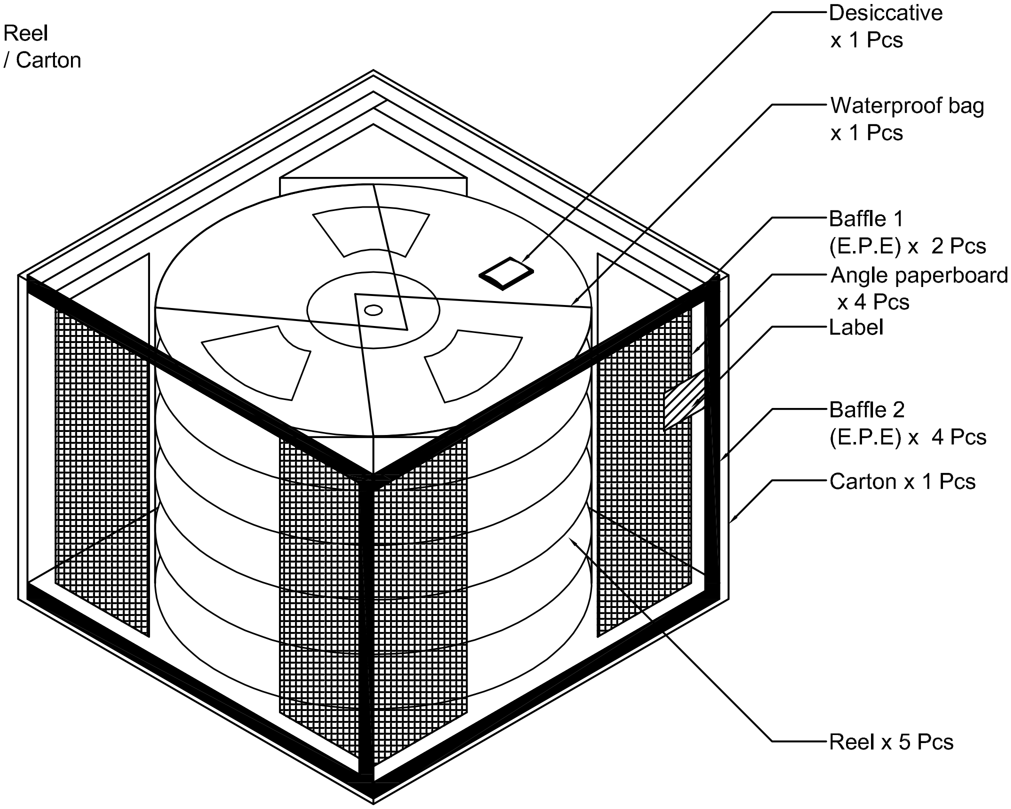

mat'l. code: –	surface: ISO 1302, 58	tolerance: ISO 406	projection: ISO 1101	product family: PCI_EXPRESS		
ltr / ecn no / dr / date	tolerances unless otherwise specified			title: PCI_EXPRESS_CARD_EDGE POST-FREE_ASSEMBLY(SMT)		
A / – / – / –	angles 0°±2°	linear .X±.3 .XX±.20 XXX±.10	MM, scale 1			
	dr	RICHARD_CHIU	1/30/'07	dwg no: 10076266	sheet 6 of 6	size A4
	engr	RICHARD_CHIU	1/30/'07			
	chr	PAUL_WANG	1/30/'07			
	appd	JOSEPH_HSIA	1/30/'07	type: CUSTOMER Drawing		
sheet index	revision A, sheet 6					

FCIconnect.com
Copyright FCI