Date	SYM	REVISION RECORD	AUTH	DR.	CK.
10/28/06	A	Added mounting instruction. Ø2.36 was 2.18. Ø4.57 was 4.70	T.B.	B.S.	
10/09/09	B	Added specification.	T.B.	B.S.	
02/17/12	C	Added Dim. 28.74	T.B.	B.S.	

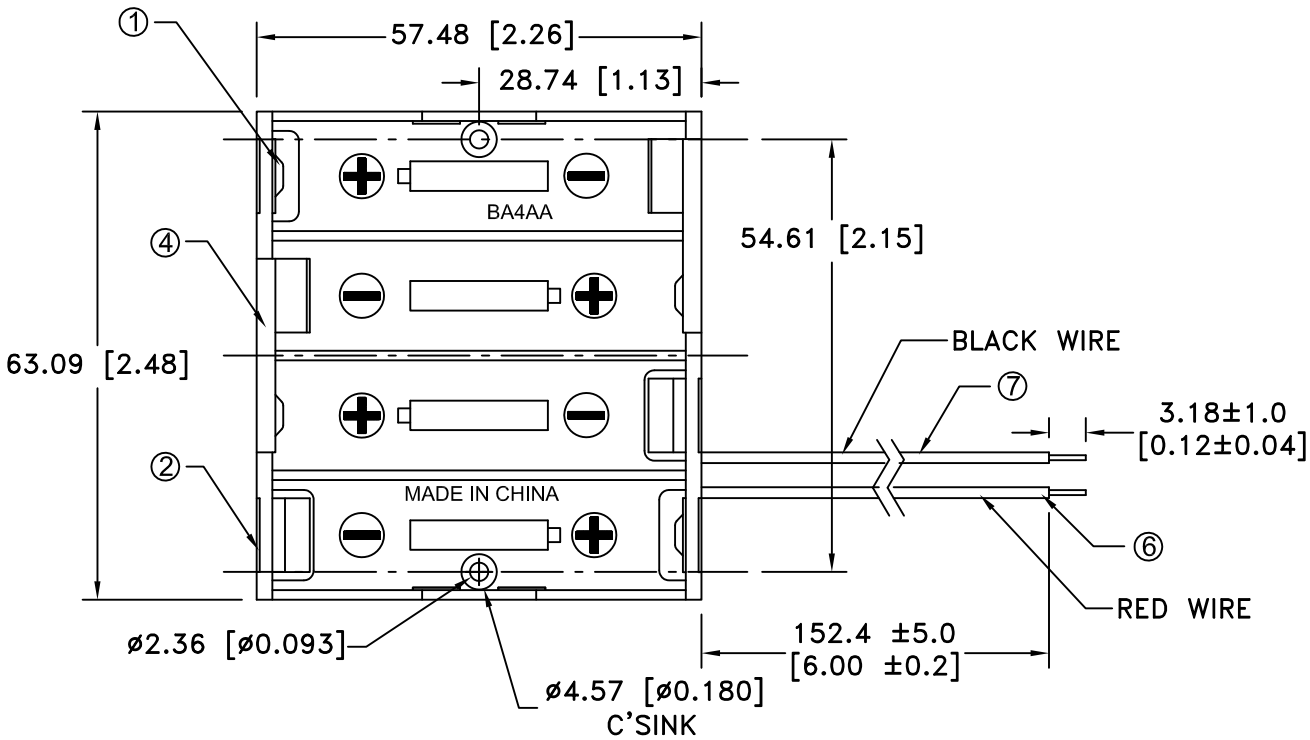

MOUNTING INSTRUCTION:
USE 2-56 MACHINE SCREWS OR EYELETS 0.089" OD BY 0.15" FLANGE STIMPSON GS-3 SERIES OR EQUIVALENT. ALSO ADHESIVES AND DOUBLE SIDED TAPES WORK WELL.

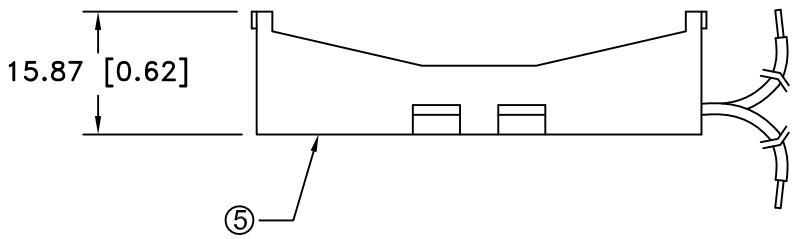

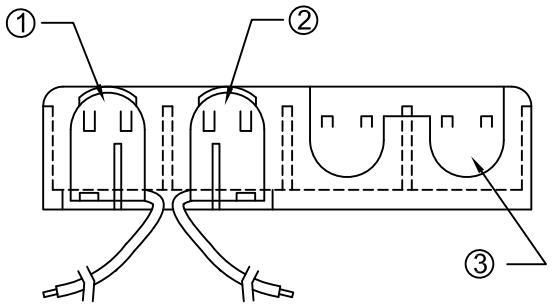

SPECIFICATION:
1. HOUSING : BLACK POLYPROPYLENE
FLAMMABILITY RATING -UL94-HB, UL FILE NO. E216959
TEMPERATURE RANGE: -10°C to +100°C
CONTACTS: NICKLE PLATED STAINLESS STEEL
WIRES: 26AWG, UL1007,CSA TR-64, 300V, 80°C
CONTACT RESISTANCE: UNDER 50mΩ FOR +/- CONTACTS PER EIA-540J000
ROHS COMPLIANT

ITEM NO.	PART NO.	MATL. SPECIFICATION	QTY.
1	ABG-194	POSITIVE CONTACT, 302 STAINLESS STEEL, NICKLE PLTD.	2
2	ABG-195	NEGATIVE CONTACT, 302 STAINLESS STEEL, NICKLE PLTD.	2
3	ABG-196-1	RIGHT NEG./POS. CONTACT, 302 STAINLESS STEEL, NICKLE PLTD.	1
4	ABG-196-2	LEFT NEG./POS. CONTACT, 302 STAINLESS STEEL, NICKLE PLTD.	1
5	ABG-187	BLACK POLYPROPYLENE HOLDER, UL94-HB	1
6		RED WIRE, 24AWG, UL1007, CSA TR-164, 80°C	1
7		BLACK WIRE, 24AWG, UL1007, CSA TR-164, 80°C	1

Tolerance (Except as noted)
decimal ±.5 (.020)
Fractional ± .8 (.030)
Angular ± 3°

MPD Memory Protection Devices, Inc
200 Broad Hollow Road, Farmingdale, New York 11735

Scale
Drawn By B.S.
Approved By T.B.

Title
FOUR "AA" CELL SPRINGLESS HOLDER

Date 02/17/12

Drawing Number
BA4AAW