FAL6F (110□ x 28.1L)

NMB-MAT

EMINEBEA.COM

DC Axial Fans

General Specifications

Allowable Ambient Temperature Range:
-10°C ~ +60°C (65% RH) (Operating)
-40°C ~ +75°C (65% RH) (Storage)
(non-condensing environment)

Expected Life

Failure Rate: 10%
30,000 Hours (25°C, 65%RH)

Outline

Units: inch / (mm)

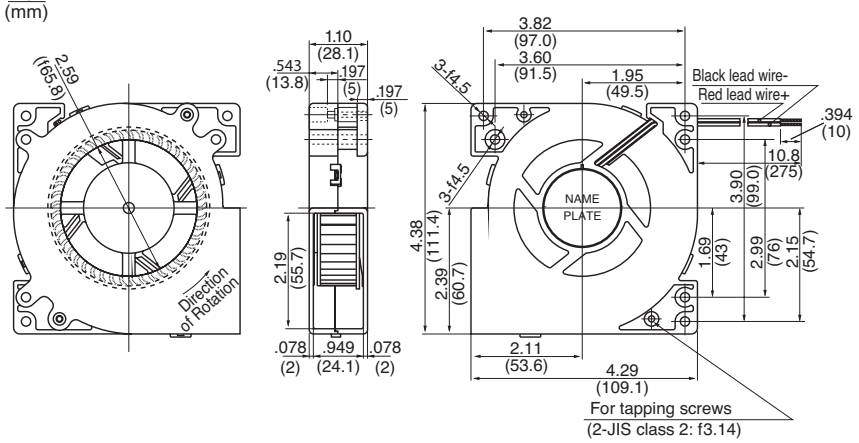

Characteristic Curves

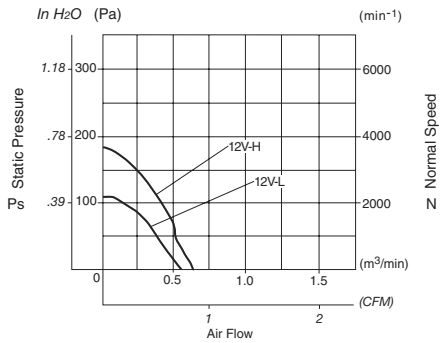

Material

Bearing: Hydro Wave Bearing

Specifications

MODEL	Rated Voltage	Operating Voltage	Current	Input Power	Rated Speed	Max. Air Flow		Max. Static Pressure		Noise	Mass
	(V)	(V)	(A)*1	(W)*1	(min-1)*1	CFM*1	(m3/min)*1	in H2O	(Pa)*1	(dB)*1	(g)
FAL6F 12LL	12	7.0 ~ 13.8	280	3.36	2100	18.7	0.53	.44	110.3	40.0	250
FAL6F 12LH	12	7.0 ~ 13.8	500	6.00	2550	23.0	0.65	.70	176.5	45.0	250
FAL6F 24LL	24	14.0 ~ 27.6	155	3.72	2100	18.7	0.53	.45	112.8	40.0	250
FAL6F 24LH	24	14.0 ~ 27.6	295	7.08	2550	23.7	0.67	.77	193.2	45.0	250

Rotation: Clockwise Airflow Outlet: Air Out Over Struts *1: Average Values in Free Air