THIS DRAWING IS UNPUBLISHED. RELEASED FOR PUBLICATION 20
© COPYRIGHT 20 BY - ALL RIGHTS RESERVED.

| REVISIONS | | | | | |
|---|---|---|---|---|---|
| P | LTR | DESCRIPTION | DATE | DWN | APVD |
| | A33 | REVISED PER ECO-16-015393 | 26OCT2016 | DD | GK |
| | A34 | REVISED PER ECO-16-017815 | 09DEC2016 | DD | GK |
| | A35 | REVISED PER ECO-17-003501 | 22MAR2017 | DD | GK |
| | | | | | |

| LIST OF PARTS | | | | | | | | | |
|---|---|---|---|---|---|---|---|---|---|
| QTY. REQUIRED | | | ITEM | DESCRIPTION | COLOR | SUPPLIER PART NUMBER | MATERIAL SPECIFICATION | RECYCLING CODE | WEIGHT (GRAM) |
| INDEX C | INDEX B | INDEX A | | | | | | | |
| - | - | 1 | | HOUSING, KEYING OPTION "A" | BLACK | 0-1587054-1 | 30% GF PBT | >PBT-GF30< | TBD |
| - | 1 | - | 1 | HOUSING, KEYING OPTION "B" | GRAY | 0-1587054-2 | 30% GF PBT | >PBT-GF30< | TBD |
| 1 | - | - | | HOUSING, KEYING OPTION "C" | NATURAL | 0-1587054-3 | 30% GF PBT | >PBT-GF30< | TBD |
| 1 | 1 | 1 | 2 | TPA | RED | 0-1587055-1 | 15% GF PBT | >PBT-GF15< | TBD |
| 1 | 1 | 1 | 3 | ALIGNMENT PLATE | NATURAL | 0-1587056-1 | 15% GF PBT | >PBT-GF15< | TBD |
| 1 | 1 | 1 | 4 | END SEAL COVER | BLACK | 0-1587057-1 | 15% GF PBT | >PBT-GF15< | TBD |
| 1 | 1 | 1 | 5 | END SEAL GROMMET | LT GREEN | 0-1587058-1 | SILICON | >VMQ< | TBD |

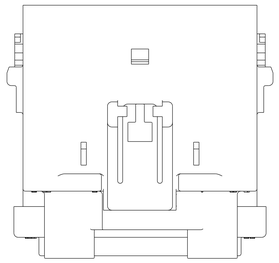

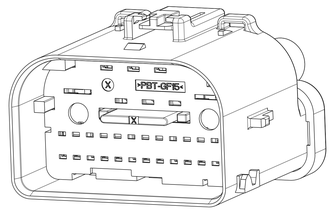


1. PART MUST CONFORM TO THE USCAR-2 SPECIFICATION, DATED 07/DEC/00 (REVISION 3).
2. 0.2mm MAXIMUM RADIUS PERMISSIBLE ON EDGES AND FILLETS SHOWN AS SHARP FOR PLASTIC PARTS.
3. PRODUCTION DATE CODE AND PINOUT CODE MUST BE LEGIBLE AND PERMANENTLY APPLIED WHEREVER PACKAGE SIZE PERMITS OR OTHER AGREEMENTS ARE MADE.
4. MATES WITH ASSEMBLY SHOWN ON DRAWING 1438841.
5. SEE TE INSTRUCTION SHEET 408-8911 FOR PROPER POSITIONING OF TPA AND TE INSTRUCTION SHEET 408-8832 FOR APPLICATION USE OF CONNECTOR SYSTEM.
6. TERMINAL CAVITIES 9-34 ARE RESTRICTED TO WIRE OD RANGE OF 1.20-2.34mm.

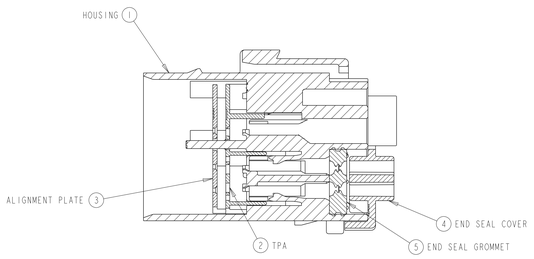


SECTION A-A
TPA AND ALIGNMENT PLATE IN PRE-SEATED POSITION 5

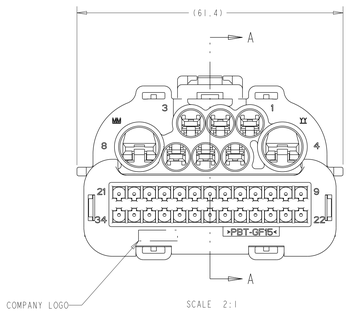


SCALE 2:1

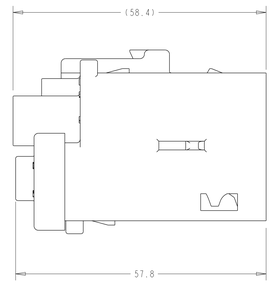


| APPLICABLE COMPONENTS (FOR REFERENCE ONLY) | | | | APPLICABLE WIRE SIZES (FOR REFERENCE ONLY) | COMPONENT MATING PART NUMBER |
|---|---|---|---|---|---|
| DESCRIPTION | COLOR/ PLATING | SUPPLIER | SUPPLIER PART NUMBER | | |
| 6 TERMINAL - MALE 1.5mm | TIN | MOLEX | 33000-0002 | 16 AWG 18-20 AWG OR METRIC EQUIVALENT | 33012-2001 33012-2002 |
| 6 TERMINAL - MALE 1.5mm | TIN | MOLEX | 33000-0003 | 22 AWG OR METRIC EQUIVALENT | 33012-2003 |
| TERMINAL - MALE 2.8mm | TIN | TE | 1326031-2 | 20 AWG OR METRIC EQUIVALENT | 1326032-2 |
| TERMINAL - MALE 2.8mm | TIN | TE | 1326031-3 | 18 AWG OR METRIC EQUIVALENT | 1326032-3 |
| TERMINAL - MALE 2.8mm | TIN | TE | 1326031-4 | 16 AWG OR METRIC EQUIVALENT | 1326032-4 |
| TERMINAL - MALE 2.8mm | TIN | TE | 1326031-5 | 14 AWG OR METRIC EQUIVALENT | 1326032-5 |
| TERMINAL - MALE 2.8mm | TIN | TE | 1-1326031-1 | 12 AWG OR METRIC EQUIVALENT | 1326032-6 |
| CABLE SEAL - 2.8mm | GREEN | YAZAKI | 7158-3111-60 | 1.2-1.9mm WIRE O.D. | N/A |
| CABLE SEAL - 2.8mm | YELLOW | YAZAKI | 7158-3112-70 | 1.8-2.3mm WIRE O.D. | N/A |
| CABLE SEAL - 2.8mm | WHITE | YAZAKI | 7158-3113-40 | 2.1-3.0mm WIRE O.D. | N/A |
| CABLE SEAL - 2.8mm | LT GRAY | YAZAKI | 7158-3110-40 | 3.1-3.3mm WIRE O.D. | N/A |
| TERMINAL - MALE 6.3mm | TIN | YAZAKI | 7114-4140-02 | 20-16 AWG OR METRIC EQUIVALENT | 7116-4140-02 |
| TERMINAL - MALE 6.3mm | TIN | YAZAKI | 7114-4141-02 | 14 AWG OR METRIC EQUIVALENT | 7116-4141-02 |
| TERMINAL - MALE 6.3mm | TIN | YAZAKI | 7114-4142-02 | 12 AWG OR METRIC EQUIVALENT | 7116-4142-02 |
| TERMINAL - MALE 6.3mm | TIN | YAZAKI | 7114-4143-02 | 10 AWG OR METRIC EQUIVALENT | 7116-4143-02 |
| CABLE SEAL - 6.3mm | RED | YAZAKI | 7158-3081-50 | 1.4-2.3mm WIRE O.D. | N/A |
| CABLE SEAL - 6.3mm | BLUE | YAZAKI | 7158-3082-90 | 2.1-3.0mm WIRE O.D. | N/A |
| CABLE SEAL - 6.3mm | BLACK | YAZAKI | 7158-3083 | 3.0-3.8mm WIRE O.D. | N/A |
| CABLE SEAL - 6.3mm | LT GRAY | YAZAKI | 7158-3084-40 | 3.8-4.05mm WIRE O.D. | N/A |
| CAVITY PLUG - 2.8mm | BLUE | YAZAKI | 7158-3114-90 | N/A | N/A |
| CAVITY PLUG - 6.3mm | GREEN | YAZAKI | 7158-3080-60 | N/A | N/A |

NOTE: SEE SUPPLIER DRAWINGS FOR LATEST INFORMATION AND CRIMP SPECIFICATIONS.

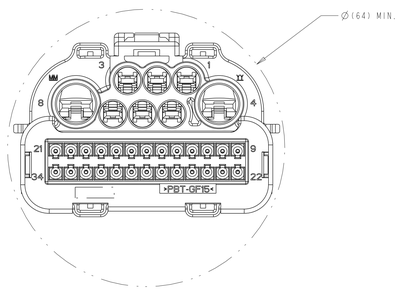


MIN. FEED THRU CONDITION
WITH 1mm CLEARANCE ALL AROUND
SCALE 2:1

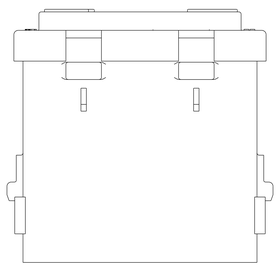

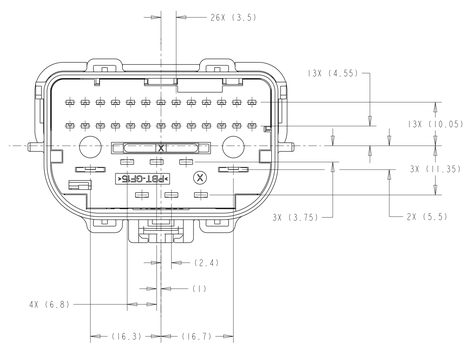


THIS DRAWING IS A CONTROLLED DOCUMENT.

DIMENSIONS: mm

TOLERANCES UNLESS OTHERWISE SPECIFIED:
0 PLC ±0.3
1 PLC ±0.3
2 PLC ±0.1
3 PLC ±0.1
4 PLC ±0.1
ANGLES ±1°

MATERIAL -
FINISH -

DWN BL DRUMMOND 18OCT2004
CHK RL CORLE 19OCT2004
APVD RL CORLE 19OCT2004
PRODUCT SPEC -
APPLICATION SPEC -
WEIGHT -

TE Connectivity

NAME CAP ASSEMBLY, 34 WAY, SEALED, HYBRID, MALE

SIZE A0 | CAGE CODE 00779 | DRAWING NO C-1438842 | RESTRICTED TO -

CUSTOMER DRAWING | SCALE 2:1 | SHEET 5 OF 5 | REV A35

A806 (3/13)

THIS DRAWING IS UNPUBLISHED. RELEASED FOR PUBLICATION 20
© COPYRIGHT 20 BY - ALL RIGHTS RESERVED.

| REVISIONS | | | | | |
|---|---|---|---|---|---|
| P | LTR | DESCRIPTION | DATE | DWN | APVD |
| | - | SEE SHEET 1 | - | - | - |

# HARNESS KEYING OPTIONS
SCALE 2:1

INDEX A

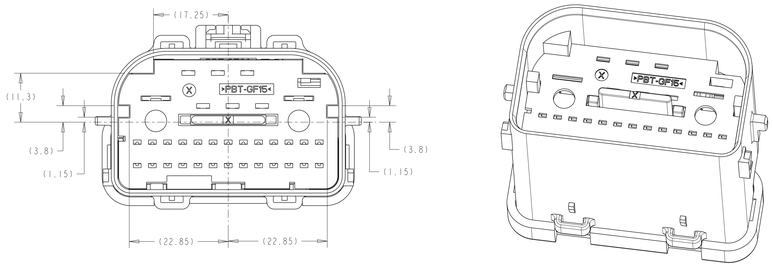


INDEX B

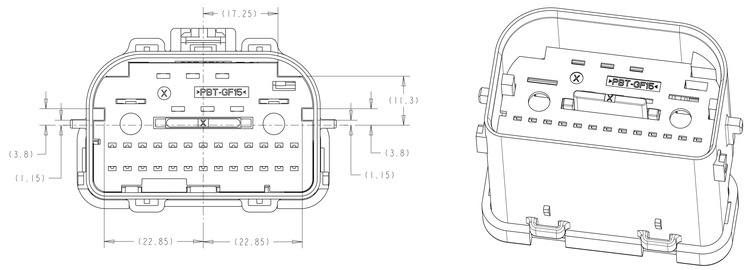


INDEX C

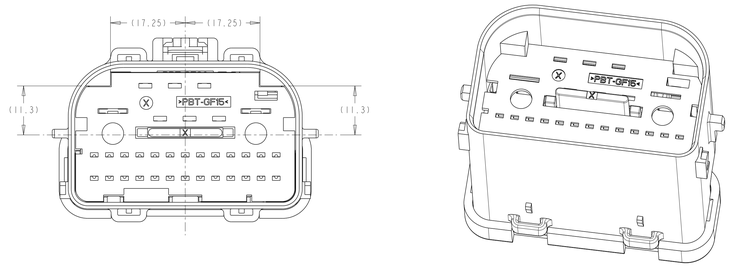


| TE P/N | PINOUT ID CODE | INDEX (KEY) | COLOR | 1 | 2 | 3 | 4 | 5 | 6 | 7 | 8 | 9 | 10 | 11 | 12 | 13 | 14 | 15 | 16 | 17 | 18 | 19 | 20 | 21 | 22 | 23 | 24 | 25 | 26 | 27 | 28 | 29 | 30 | 31 | 32 | 33 | 34 |
|---|---|---|---|---|---|---|---|---|---|---|---|---|---|---|---|---|---|---|---|---|---|---|---|---|---|---|---|---|---|---|---|---|---|---|---|---|---|
| 6-1438842-5 | ACK | A | BLACK | | | | | | | | | | | | | | | | | 17 | | | | | | 23 | | | | | | 29 | | | | 33 | 34 |
| 6-1438842-4 | ACJ | A | BLACK | | | | | | | | | | | | | | | | | 17 | | | | 21 | | 23 | | | | | | 29 | 30 | 31 | 32 | 33 | 34 |
| 6-1438842-3 | ACI | A | BLACK | | | | | | | | | | | | | | | | | | | | | 21 | | | | | | | | | 30 | 31 | 32 | | |
| 6-1438842-2 | ACH | A | BLACK | | | | | | | | | | | | | | | | | | | | | | 22 | | | | | | | | | | | | |
| 6-1438842-1 | ACG | A | BLACK | | | | | | | | | 9 | 10 | 11 | 12 | | 14 | | | | | | 20 | 21 | 22 | 23 | | 25 | | 27 | 28 | | 30 | 31 | | 33 | 34 |
| 6-1438842-0 | ACF | A | BLACK | | | | | | | | | 9 | 10 | 11 | 12 | | 14 | | | | | | 20 | 21 | 22 | 23 | | 25 | | | 28 | | 30 | 31 | | | |
| 5-1438842-9 | ACE | A | BLACK | | | | | | | | | 9 | 10 | 11 | 12 | | | | | | | | | | | | | | | 27 | | | | | | 33 | |
| 5-1438842-8 | ACD | A | BLACK | | | | | | | | | 9 | 10 | 11 | 12 | | | | | | | | | | | | | | | | | | | | | | |
| 5-1438842-7 | ACC | A | BLACK | | | | | | | | | | | 11 | | 13 | | | | | 18 | | | 21 | | 23 | | | | | | 29 | | | | 33 | 34 |
| 5-1438842-6 | ACB | A | BLACK | | | | | | | | | | 10 | | 12 | 13 | 14 | | 16 | 17 | 18 | 19 | 20 | 21 | | | 24 | 25 | | 27 | 28 | 29 | 30 | 31 | | 33 | |
| 5-1438842-5 | ACA | A | BLACK | | | | | | | | | | 10 | | 12 | 13 | 14 | 15 | 16 | 17 | 18 | 19 | 20 | 21 | | | 24 | 25 | 26 | 27 | 28 | | 30 | 31 | 32 | 33 | 34 |
| 5-1438842-4 | ABZ | A | BLACK | | | | | | | | | | | | 12 | | 14 | 15 | 16 | | 18 | | 20 | | | | | | 26 | 27 | | | | | | | |
| 5-1438842-3 | ABY | A | BLACK | | | | | | | | | | 10 | | 12 | 13 | 14 | | 16 | 17 | 18 | 19 | 20 | 21 | | | 24 | 25 | | 27 | 28 | | 30 | 31 | | 33 | |
| 5-1438842-2 | ABX | A | BLACK | | | | | | | | | | | | 12 | | | | | | | 19 | 20 | 21 | 22 | | | | | | | | | | | | |
| 5-1438842-1 | ABW | A | BLACK | | | | | | | | | | | | 12 | | | | | | | 19 | 20 | 21 | 22 | | | 25 | 26 | 27 | | | | | | | |
| 5-1438842-0 | ABV | A | BLACK | | | | | | | | | | 10 | 11 | | 13 | 14 | 15 | 16 | 17 | | | | | | | 24 | 25 | 26 | | | | | 31 | 32 | 33 | 34 |
| 4-1438842-9 | ABU | A | BLACK | | | | | | | | | | | 11 | | | | | | | | | | | 22 | 23 | | | 26 | 27 | 28 | 29 | 30 | 31 | 32 | 33 | 34 |
| 4-1438842-8 | ABT | A | BLACK | | | | | | | | | | | 11 | | | | | | | | | | | | | | | 26 | | | | 30 | 31 | 32 | 33 | 34 |
| 4-1438842-7 | ABS | A | BLACK | | | | | | | | | 9 | 10 | 11 | | 13 | 14 | 15 | 16 | 17 | 18 | 19 | 20 | | 22 | 23 | 24 | 25 | 26 | 27 | 28 | | 30 | 31 | 32 | 33 | 34 |
| 4-1438842-6 | ABR | A | BLACK | | | | | | | | | | 10 | | 12 | 13 | 14 | 15 | 16 | 17 | 18 | 19 | 20 | 21 | | | 24 | 25 | 26 | 27 | 28 | 29 | 30 | 31 | 32 | 33 | 34 |
| 4-1438842-5 | ABQ | A | BLACK | | | | | | | | | | | | 12 | | 14 | 15 | 16 | | 18 | | 20 | | | | | | 26 | 27 | | 29 | | | | | |
| 4-1438842-4 | ABP | A | BLACK | | | | | | | | | | | | 12 | 13 | 14 | | 16 | 17 | 18 | 19 | 20 | 21 | | | 24 | 25 | | 27 | 28 | 29 | 30 | 31 | | 33 | |
| 4-1438842-3 | ABO | A | BLACK | | | | | | | | | | | | 12 | 13 | 14 | | 16 | 17 | 18 | 19 | 20 | 21 | | | 24 | 25 | | 27 | 28 | | 30 | 31 | | 33 | |
| 4-1438842-2 | ABN | A | BLACK | | | | | | | | | | | | | | | | | | | | | | | | | 25 | | | | | | | | | |
| 4-1438842-1 | ABM | A | BLACK | | | | | | | | | | | | | | | | | | | | | | | | | 25 | 26 | 27 | | | | | 32 | | |
| 4-1438842-0 | ABL | A | BLACK | | | | | | | | | | | | 12 | | | | | | | | 20 | | | | | | | | | 29 | | | | | |
| 3-1438842-9 | ABK | A | BLACK | | | | | | | | | | | | 12 | | 14 | | 16 | | 18 | | 20 | | | | | | | 27 | | | | | | | |
| 3-1438842-8 | ABJ | A | BLACK | | | | | | | | | | | | 12 | | 14 | | 16 | | 18 | | 20 | | | | | | | 27 | | 29 | | | | | |
| 3-1438842-7 | ABI | A | BLACK | | | | | | | | | | | | | | | | | | | | | | | | 24 | 25 | | | 28 | | | | | | |
| 3-1438842-6 | ABH | A | BLACK | | | | | | | | | | | | | | | | | | | | | | | | 24 | 25 | 26 | 27 | 28 | | | | 32 | | |
| 3-1438842-5 | ABG | A | BLACK | | | | | | | | | | | | | | | | | | | | | | | | 24 | | | | 28 | | | | | | |
| 3-1438842-4 | ABF | A | BLACK | | | | | | | | | | | | 12 | | | | | | | 19 | 20 | 21 | 22 | | 24 | 25 | | | 28 | | | | | | |
| 3-1438842-3 | ABE | A | BLACK | | | | | | | | | | | | 12 | | | | | | | 19 | 20 | 21 | 22 | | 24 | | | | 28 | | | | | | |
| 3-1438842-2 | ABD | A | BLACK | | | | | | | | | | | | | | | | | | | 19 | 20 | 21 | 22 | | | | 26 | 27 | | | 30 | 31 | | | 34 |
| 3-1438842-1 | ABC | A | BLACK | | | | | | | | | | | | | | | 15 | 16 | 17 | | | | | | 23 | | | | | | | 30 | 31 | | | |
| 3-1438842-0 | ABB | A | BLACK | | | | | | | | | | | 11 | | | | | | | | 19 | | | | | 24 | | | | | | | | | | |
| 2-1438842-9 | ABA | A | BLACK | | | | | | | | | | | | | | | | | | | 19 | | | 22 | | 24 | | 26 | 27 | 28 | | | | 32 | | |
| 2-1438842-8 | AAZ | A | BLACK | | | | | | | | | | | 11 | | | | | | | | 19 | | | | | 24 | 25 | | | | | | | | | |
| 2-1438842-7 | AAY | A | BLACK | | | | | | | | | | | | | | | | | | | 19 | | | 22 | | 24 | 25 | 26 | 27 | 28 | | | | 32 | | |
| 2-1438842-6 | AAX | A | BLACK | | | | | | | | | | | 11 | 12 | | | | | | | 19 | 20 | 21 | | | 24 | | | | | | | | | | |
| 2-1438842-5 | AAW | A | BLACK | | | | | | | | | | | 11 | 12 | | | | | | | 19 | 20 | 21 | | | 24 | 25 | | | | | | | | | |
| 2-1438842-4 | AAV | A | BLACK | | | | | | | | | | | | 12 | | | | | | | 19 | 20 | 21 | 22 | | 24 | 25 | 26 | 27 | 28 | | | | | | |
| 2-1438842-3 | AAU | A | BLACK | | | | | | | | | | | | 12 | | | | | | | | 20 | 21 | 22 | | | | 26 | 27 | 28 | | | | | | |
| 2-1438842-2 | AAT | A | BLACK | | | | | | | | | | | 11 | 12 | | | | | | | | 20 | 21 | | | | | | | | | | | | | |
| 2-1438842-1 | AAS | A | BLACK | | | | | | | | | | | 11 | 12 | | | | | | | 19 | 20 | 21 | | | | | | | | | | | | | |
| 2-1438842-0 | AAR | A | BLACK | | | | | | | | | | | | 12 | | | | | | | 19 | 20 | 21 | 22 | | 24 | | 26 | 27 | 28 | | | | | | |
| 1-1438842-9 | AAQ | A | BLACK | | | | | | | | | | | | | | | | | | | | 20 | | | 23 | 24 | 25 | | 27 | 28 | 29 | 30 | 31 | | 33 | |
| 1-1438842-8 | AAP | A | BLACK | | | | | | | | | | | | | | | | | | | | | | | 23 | 24 | 25 | | | | | | 31 | | 33 | |
| 1-1438842-7 | AAO | A | BLACK | | | | | | | | | | | | | | | | | | | | | 21 | 22 | 23 | 24 | 25 | | | | | | 31 | | 33 | |
| 1-1438842-6 | AAN | A | BLACK | | | | | | | | | | | | | | | | | | | | 20 | 21 | 22 | 23 | 24 | 25 | | 27 | 28 | 29 | 30 | 31 | | 33 | |
| 1-1438842-5 | AAM | A | BLACK | | | | | | | | | 9 | 10 | 11 | 12 | 13 | 14 | | | | | | | | | 23 | | | 26 | 27 | | | | | | | |
| 1-1438842-4 | AAL | A | BLACK | | | | | | | | | 9 | 10 | 11 | 12 | 13 | 14 | | | | | | 20 | 21 | 22 | 23 | | 25 | 26 | 27 | 28 | 29 | 30 | | | | |
| 1-1438842-3 | AAK | A | BLACK | | | | | | | | | 9 | 10 | 11 | 12 | | | | | | | | | | | | | | | 27 | | | | | | | |
| 1-1438842-2 | AAJ | A | BLACK | | | | | | | | | 9 | 10 | 11 | 12 | | | | | | | | 20 | 21 | 22 | | | 25 | | 27 | 28 | 29 | 30 | | | | |
| 1-1438842-1 | AAI | A | BLACK | | | | | | | | | 9 | 10 | 11 | 12 | 13 | 14 | | | | | | | | | 23 | | | 26 | 27 | | | | | | | |
| 1-1438842-0 | AAH | A | BLACK | | | | | | | | | 9 | 10 | 11 | 12 | 13 | 14 | | | | | | 20 | 21 | 22 | 23 | | | 26 | 27 | 28 | 29 | 30 | | | | |
| 1438842-9 | AAG | A | BLACK | | | | | | | | | 9 | 10 | 11 | 12 | | | | | | | | | | | | | | | 27 | | | | | | | |
| 1438842-8 | AAF | A | BLACK | | | | | | | | | 9 | 10 | 11 | 12 | | | | | | | | 20 | 21 | 22 | | | 25 | | 27 | 28 | 29 | 30 | | | | |
| 1438842-7 | AAE | A | BLACK | | | | | | | | | | | | | 13 | 14 | | | | | | 20 | 21 | 22 | 23 | 24 | 25 | 26 | 27 | 28 | 29 | | 31 | 32 | 33 | 34 |
| 1438842-6 | AAD | A | BLACK | | | | | | | | | | | | | | | | | | | | | | | | | 25 | 26 | 27 | 28 | 29 | | | | | |
| 1438842-5 | AAC | A | BLACK | | | | | | | | | | | | | | | | | | | | 20 | 21 | 22 | 23 | 24 | 25 | 26 | 27 | 28 | 29 | | 31 | | | 34 |
| 1438842-4 | AAB | A | BLACK | | | | | | | | | | | | | | 14 | | | | | | | | | | | 25 | 26 | 27 | 28 | 29 | | | 32 | 33 | |
| 1438842-3 | CAA | C | NATURAL | | | | | | | | | | | | | | | | | | | | | | | | | | | | | | | | | | |
| 1438842-2 | BAA | B | GRAY | | | | | | | | | | | | | | | | | | | | | | | | | | | | | | | | | | |
| 1438842-1 | AAA | A | BLACK | | | | | | | | | | | | | | | | | | | | | | | | | | | | | | | | | | |

CIRCUITS 1 THRU 8 REMAIN OPEN

BLOCKED CAVITIES INDICATED BY A NUMERIC SYMBOL IN THAT CIRCUIT LOCATION

THIS DRAWING IS A CONTROLLED DOCUMENT.

DIMENSIONS: mm

TOLERANCES UNLESS OTHERWISE SPECIFIED:
0 PLC ±0.3
1 PLC ±0.3
2 PLC ±0.1
3 PLC ±0.1
4 PLC ±0.1
ANGLES ±1°
FINISH -

MATERIAL - -

DWN D. DRUMMOND 20OCT2004
CHK R. COBLE 20OCT2004
APVD R. COBLE 20OCT2004

PRODUCT SPEC -
APPLICATION SPEC - -
WEIGHT -

CUSTOMER DRAWING

TE Connectivity

NAME CAP ASSEMBLY, 34 WAY, SEALED, HYBRID, MALE

| SIZE | CAGE CODE | DRAWING NO | RESTRICTED TO |
|---|---|---|---|
| A0 | 00779 | C-1438842 | - |

SCALE 2:1 SHEET 2 OF 5 REV A35

4806 (3/13)

THIS DRAWING IS UNPUBLISHED. RELEASED FOR PUBLICATION 20
© COPYRIGHT 20 BY - ALL RIGHTS RESERVED.

REVISIONS

| P | LTR | DESCRIPTION | DATE | DWN | APVD |
|---|---|---|---|---|---|
| | - | SEE SHEET 1 | - | - | - |

| TE P/N | PINOUT ID CODE | INDEX (KEY) | COLOR | 1 | 2 | 3 | 4 | 5 | 6 | 7 | 8 | 9 | 10 | 11 | 12 | 13 | 14 | 15 | 16 | 17 | 18 | 19 | 20 | 21 | 22 | 23 | 24 | 25 | 26 | 27 | 28 | 29 | 30 | 31 | 32 | 33 | 34 |
|---|---|---|---|---|---|---|---|---|---|---|---|---|---|---|---|---|---|---|---|---|---|---|---|---|---|---|---|---|---|---|---|---|---|---|---|---|---|
| 3-2203356-1 | AEX | A | BLACK | | | | | | | | | 9 | | 11 | | | | 15 | | | | 19 | | | 22 | 23 | | | | | | | | | 32 | 33 | |
| 3-2203356-0 | AEW | A | BLACK | | | | | | | | | 9 | | | | | | | | | | | | | 22 | 23 | | | | | | | | | 32 | 33 | |
| 2-2203356-9 | AEV | A | BLACK | | | | | | | | | 9 | | | 12 | 13 | 14 | | | | | | | | | 23 | 24 | 25 | 26 | 27 | 28 | 29 | | 31 | | | | |
| 2-2203356-8 | AEU | A | BLACK | | | | | | | | | 9 | | | 12 | 13 | 14 | | | | | | | | 22 | 23 | 24 | 25 | 26 | 27 | 28 | 29 | | 31 | 32 | 33 | |
| 2-2203356-7 | AET | A | BLACK | | | | | | | | | | | | 12 | 13 | 14 | | | | | | | | | 23 | 24 | 25 | 26 | 27 | 28 | 29 | | 31 | | | | |
| 2-2203356-6 | AES | A | BLACK | | | | | | | | | 9 | | 11 | 12 | 13 | 14 | 15 | | | | 19 | | | 22 | 23 | 24 | 25 | 26 | 27 | 28 | 29 | | 31 | 32 | 33 | |
| 2-2203356-5 | AER | A | BLACK | | | | | | | | | | | | | | | | | | | | | | 22 | | 24 | 25 | | | | | | 31 | 32 | 33 | |
| 2-2203356-4 | AEQ | A | BLACK | | | | | | | | | 9 | | | | | | | | | | | | | 22 | | 24 | 25 | | | | | | 31 | 32 | 33 | |
| 2-2203356-3 | AEP | A | BLACK | | | | | | | | | | | | 12 | 13 | 14 | | | | | | | | 22 | 23 | 24 | 25 | 26 | 27 | 28 | 29 | | 31 | 32 | 33 | |
| 2-2203356-2 | AEO | A | BLACK | | | | | | | | | | | 11 | 12 | 13 | 14 | 15 | | | | 19 | | | 22 | 23 | 24 | 25 | 26 | 27 | 28 | 29 | | 31 | 32 | 33 | |
| 2-2203356-1 | AEN | A | BLACK | | | | | | | | | | | | | 13 | 14 | | | | | | | | 22 | 23 | 24 | 25 | 26 | 27 | 28 | 29 | | 31 | 32 | 33 | |
| 2-2203356-0 | AEM | A | BLACK | | | | | | | | | 9 | | | | 13 | 14 | | | | | | | | 22 | 23 | 24 | 25 | 26 | 27 | 28 | 29 | | 31 | 32 | 33 | |
| 1-2203356-9 | AEL | A | BLACK | | | | | | | | | | | | | | | | | | | | | | | 23 | | | | | | | | | | | |
| 1-2203356-8 | AEK | A | BLACK | | | | | | | | | | | 11 | | | | 15 | | | | 19 | | | 22 | | 24 | 25 | | | | | | 31 | 32 | 33 | |
| 1-2203356-7 | AEJ | A | BLACK | | | | | | | | | 9 | | 11 | | 13 | 14 | 15 | | | | 19 | | 21 | 22 | 23 | | | 26 | | 28 | 29 | | | 32 | 33 | |
| 1-2203356-6 | AEI | B | GRAY | | | | | | | | | 9 | | 11 | | 13 | 14 | | | | 18 | | | | 22 | | | | 26 | 27 | 28 | 29 | 30 | 31 | 32 | 33 | 34 |
| 1-2203356-5 | AEH | B | GRAY | | | | | | | | | 9 | | 11 | | 13 | 14 | | | | 18 | | | | 22 | | 24 | 25 | 26 | 27 | 28 | 29 | 30 | 31 | 32 | 33 | 34 |
| 1-2203356-4 | AEG | A | BLACK | | | | | | | | | 9 | | | 12 | | | 15 | 16 | 17 | 18 | 19 | 20 | 21 | 22 | | 24 | 25 | 26 | 27 | 28 | | | | | | |
| 1-2203356-3 | AEF | A | BLACK | | | | | | | | | 9 | | | 12 | 13 | | | | | | | 20 | | | | | | 26 | | | | | | 32 | 33 | |
| 1-2203356-2 | AEE | A | BLACK | | | | | | | | | 9 | | | 12 | | | | | | | | | | 22 | | | | 26 | | | | | | | 33 | |
| 1-2203356-1 | AED | A | BLACK | | | | | | | | | 9 | | | 12 | 13 | | | | | | | | | | | | | 26 | | | | | | | 33 | |
| 1-2203356-0 | AEC | A | BLACK | | | | | | | | | 9 | | | 12 | 13 | | | | | | | | 21 | | | | | 26 | | | | | 31 | 32 | 33 | |
| 2203356-9 | AEB | A | BLACK | | | | | | | | | 9 | | | 12 | | | 15 | | | | | 20 | | | | | | 26 | | | | | | 32 | 33 | |
| 2203356-8 | AEA | B | GRAY | | | | | | | | | | | | | 13 | | | | | | | | | 22 | | | | | | | | 30 | | 32 | 33 | 34 |
| 2203356-7 | ADZ | B | GRAY | | | | | | | | | | | | | 13 | | | | | | | | | | | | | | | | | 30 | | 32 | | 34 |
| 2203356-6 | ADY | B | GRAY | | | | | | | | | | | | | 13 | 14 | 15 | 16 | 17 | | | | | | | | | 26 | | | | | 31 | | | |
| 2203356-5 | ADX | A | BLACK | | | | | | | | | | | 11 | | | | | | | | | | | | | | 25 | | 27 | 28 | | | | | | 34 |
| 2203356-4 | ADW | A | BLACK | | | | | | | | | | | | | 13 | 14 | 15 | 16 | 17 | | | | | | | | | 26 | | | | | 31 | | | |
| 2203356-3 | ADV | A | BLACK | | | | | | | | | 9 | | 11 | 12 | 13 | 14 | 15 | | 17 | | 19 | | 21 | 22 | | 24 | 25 | 26 | 27 | 28 | 29 | | 31 | 32 | 33 | |
| 2203356-2 | ADU | A | BLACK | | | | | | | | | 9 | | 11 | 12 | 13 | 14 | 15 | | 17 | | 19 | | 21 | | | 24 | 25 | 26 | 27 | 28 | 29 | | 31 | | | |
| 2203356-1 | ADT | A | BLACK | | | | | | | | | 9 | | 11 | 12 | 13 | 14 | | | 17 | | | | 21 | | | 24 | 25 | 26 | 27 | 28 | 29 | | 31 | | | |
| 9-1438842-9 | ADS | A | BLACK | | | | | | | | | 9 | 10 | 11 | 12 | | | 15 | | | | 19 | | | 22 | | | | | | | | 30 | | 32 | 33 | |
| 9-1438842-8 | ADR | A | BLACK | | | | | | | | | | 10 | 11 | 12 | | | | | | | | | | | | | | | | | | 30 | | | | |
| 9-1438842-7 | ADQ | A | BLACK | | | | | | | | | | | 11 | 12 | | | | | 17 | | | | | | | 24 | 25 | | 27 | | | | 31 | | | |
| 9-1438842-6 | ADP | A | BLACK | | | | | | | | | | | 11 | 12 | 13 | 14 | | | | | | | 21 | | | | | 26 | 27 | 28 | 29 | | | | | |
| 9-1438842-5 | ADO | A | BLACK | | | | | | | | | 9 | | 11 | 12 | 13 | 14 | 15 | | | | 19 | | 21 | | | | | 26 | 27 | 28 | 29 | | | | | |
| 9-1438842-4 | ADN | A | BLACK | | | | | | | | | | | 11 | 12 | 13 | 14 | 15 | | | | 19 | | 21 | | | | | 26 | 27 | 28 | 29 | | | | | |
| 9-1438842-3 | ADM | A | BLACK | | | | | | | | | | | 11 | 12 | 13 | 14 | | | 17 | | | | 21 | | | 24 | 25 | 26 | 27 | 28 | 29 | | 31 | | | |
| 9-1438842-2 | ADL | A | BLACK | | | | | | | | | 9 | | 11 | 12 | 13 | 14 | | | | | | | 21 | | | | | 26 | 27 | 28 | 29 | | | | | |
| 9-1438842-1 | ADK | A | BLACK | | | | | | | | | 9 | 10 | 11 | 12 | | | 15 | | | | 19 | | | | | | | | | | | 30 | | | | |
| 9-1438842-0 | ADJ | A | BLACK | | | | | | | | | | 10 | 11 | 12 | | | 15 | | | | 19 | | | | | | | | | | | 30 | | | | |
| 8-1438842-9 | ADI | A | BLACK | | | | | | | | | | 10 | 11 | 12 | | | 15 | | | | 19 | | | 22 | | | | | | | | 30 | | 32 | 33 | |
| 8-1438842-8 | ADH | A | BLACK | | | | | | | | | | | 11 | 12 | 13 | 14 | 15 | | 17 | | 19 | | 21 | | | 24 | 25 | 26 | 27 | 28 | 29 | | 31 | | | |
| 8-1438842-7 | ADG | A | BLACK | | | | | | | | | 9 | 10 | 11 | 12 | | | | | | | | | | | | | | | | | | 30 | | | | |
| 8-1438842-6 | ADF | A | BLACK | | | | | | | | | 9 | 10 | 11 | 12 | 13 | 14 | 15 | | 17 | | 19 | | 21 | 22 | | 24 | 25 | 26 | 27 | 28 | 29 | | 31 | 32 | 33 | |
| 8-1438842-5 | ADE | A | BLACK | | | | | | | | | 9 | 10 | 11 | 12 | 13 | 14 | 15 | | 17 | | 19 | | 21 | | | 24 | 25 | 26 | 27 | 28 | 29 | | 31 | | | |
| 8-1438842-4 | ADD | A | BLACK | | | | | | | | | 9 | 10 | 11 | 12 | 13 | 14 | | | 17 | | | | 21 | | | 24 | 25 | 26 | 27 | 28 | 29 | | 31 | | | |
| 8-1438842-3 | ADC | A | BLACK | | | | | | | | | 9 | 10 | 11 | 12 | | | 15 | | 17 | | 19 | | | 22 | | | | | | | | | | 32 | 33 | |
| 8-1438842-2 | ADB | A | BLACK | | | | | | | | | | 10 | 11 | 12 | | | | | 17 | | | | | | | | | | | | | | | | | |
| 8-1438842-1 | ADA | A | BLACK | | | | | | | | | | 10 | 11 | 12 | | | | | 17 | | | | | | | 24 | 25 | | 27 | | | | 31 | | | |
| 8-1438842-0 | ACZ | A | BLACK | | | | | | | | | | 10 | 11 | 12 | 13 | 14 | | | 17 | | | | 21 | | | | | 26 | 27 | 28 | 29 | | | | | |
| 7-1438842-9 | ACY | A | BLACK | | | | | | | | | 9 | 10 | 11 | 12 | 13 | 14 | | | 17 | | | | 21 | | | | | 26 | 27 | 28 | 29 | | | | | |
| 7-1438842-8 | ACX | A | BLACK | | | | | | | | | 9 | 10 | 11 | 12 | 13 | 14 | 15 | | 17 | | 19 | | 21 | | | | | 26 | 27 | 28 | 29 | | | | | |
| 7-1438842-7 | ACW | A | BLACK | | | | | | | | | | 10 | 11 | 12 | 13 | 14 | 15 | | 17 | | 19 | | 21 | | | | | 26 | 27 | 28 | 29 | | | | | |
| 7-1438842-6 | ACV | A | BLACK | | | | | | | | | | 10 | 11 | 12 | 13 | 14 | | | 17 | | | | 21 | | | 24 | 25 | 26 | 27 | 28 | 29 | | 31 | | | |
| 7-1438842-5 | ACU | A | BLACK | | | | | | | | | 9 | 10 | 11 | 12 | | | 15 | | 17 | | 19 | | | | | | | | | | | | | | | |
| 7-1438842-4 | ACT | A | BLACK | | | | | | | | | 9 | 10 | 11 | 12 | | | | | 17 | | | | | | | | | | | | | | | | | |
| 7-1438842-3 | ACS | A | BLACK | | | | | | | | | 9 | 10 | 11 | 12 | | 14 | | | | | | 20 | 21 | 22 | 23 | | | | 27 | 28 | | 30 | 31 | | | |
| 7-1438842-2 | ACR | C | NATURAL | | | | | | | | | | | | | | | | | | | | 20 | | | 23 | | | | 27 | | | 30 | | | | |
| 7-1438842-1 | ACQ | C | NATURAL | | | | | | | | | | | | | | | | | | | | | | | 23 | | | | | | | 30 | | | | |
| 7-1438842-0 | ACP | A | BLACK | | | | | | | | | 9 | 10 | 11 | | | | | | 17 | | | | | | | | | | | | 29 | | | | 33 | |
| 6-1438842-9 | ACO | A | BLACK | | | | | | | | | 9 | | 11 | | | | | | 17 | | | | | | | | | | | | 29 | | | | 33 | |
| 6-1438842-8 | ACN | A | BLACK | | | | | | | | | 9 | | 11 | | | | | | 17 | | | | 21 | | | | | | | | 29 | 30 | 31 | 32 | 33 | |
| 6-1438842-7 | ACM | A | BLACK | | | | | | | | | | 10 | | | | | | | | | | | | | | | | | | | | | | | | |
| 6-1438842-6 | ACL | A | BLACK | | | | | | | | | | | | | | | | | 17 | | | | | 22 | | | | | | | 29 | | | | 33 | 34 |

BLOCKED CAVITIES INDICATED BY A NUMERIC SYMBOL IN THAT CIRCUIT LOCATION

CIRCUITS 1 THRU 8 REMAIN OPEN

THIS DRAWING IS A CONTROLLED DOCUMENT.

DIMENSIONS: mm

TOLERANCES UNLESS OTHERWISE SPECIFIED:
0 PLC ±0.3
1 PLC ±0.3
2 PLC ±0.1
3 PLC ±0.1
4 PLC ±0.1
ANGLES ±1°

MATERIAL -
FINISH -

DWN BL DRUMMOND 30CT2004
CHK RL COBLE 190CT2004
APVD RL COBLE 190CT2004
PRODUCT SPEC -
APPLICATION SPEC -
WEIGHT -

TE Connectivity

NAME CAP ASSEMBLY, 34 WAY, SEALED, HYBRID, MALE

SIZE A0 | CAGE CODE 00779 | DRAWING NO C-1438842 | RESTRICTED TO -

CUSTOMER DRAWING | SCALE 2:1 | SHEET 3 OF 5 | REV A35

A806 (3/13)

THIS DRAWING IS UNPUBLISHED. RELEASED FOR PUBLICATION 20
© COPYRIGHT 20 BY - ALL RIGHTS RESERVED.

REVISIONS

| P | LTR | DESCRIPTION | DATE | DWN | APVD |
|---|---|---|---|---|---|
| | - | SEE SHEET 1 | - | - | - |

| TE P/N | PINOUT ID CODE | INDEX (KEY) | COLOR | 1 | 2 | 3 | 4 | 5 | 6 | 7 | 8 | 9 | 10 | 11 | 12 | 13 | 14 | 15 | 16 | 17 | 18 | 19 | 20 | 21 | 22 | 23 | 24 | 25 | 26 | 27 | 28 | 29 | 30 | 31 | 32 | 33 | 34 |
|---|---|---|---|---|---|---|---|---|---|---|---|---|---|---|---|---|---|---|---|---|---|---|---|---|---|---|---|---|---|---|---|---|---|---|---|---|---|
| 9-2203356-9 | AHN | A | BLACK | | | | | | | | | | | | 12 | | | | | | | | | | | 23 | | | | | | | | | | 33 | 34 |
| 9-2203356-8 | AHM | A | BLACK | | | | | | | | | | 10 | 11 | 12 | 13 | 14 | 15 | 16 | 17 | 18 | 19 | 20 | 21 | | 23 | | 25 | 26 | 27 | | | | | | 33 | 34 |
| 9-2203356-7 | AHL | A | BLACK | | | | | | | | | | | 11 | 12 | 13 | | | | 17 | 18 | 19 | 20 | 21 | | 23 | | | 26 | | | | | | | 33 | 34 |
| 9-2203356-6 | AHK | B | GRAY | | | | | | | | | | 10 | | 12 | 13 | 14 | | | | | | 20 | 21 | 22 | 23 | 24 | | | | 28 | 29 | 30 | 31 | 32 | 33 | |
| 9-2203356-5 | AHJ | A | BLACK | | | | | | | | | | 10 | 11 | 12 | 13 | 14 | 15 | 16 | 17 | 18 | | | | | 23 | | 25 | 26 | 27 | | | | | | 33 | 34 |
| 9-2203356-4 | AHI | A | BLACK | | | | | | | | | | | 11 | 12 | 13 | | | | 17 | 18 | | | | | 23 | | | 26 | | | | | | | 33 | 34 |
| 9-2203356-3 | AHH | A | BLACK | | | | | | | | | | | | 12 | 13 | 14 | | | | | | | 21 | | | 24 | 25 | | 27 | | | | 31 | | | |
| 9-2203356-2 | AHG | B | GRAY | | | | | | | | | 9 | | | | | 14 | | | | | | 20 | 21 | | 23 | 24 | 25 | 26 | 27 | 28 | 29 | 30 | 31 | 32 | 33 | 34 |
| 9-2203356-1 | AHF | B | GRAY | | | | | | | | | | | | | | 14 | | | | | | 20 | 21 | | 23 | 24 | 25 | 26 | 27 | 28 | 29 | 30 | 31 | 32 | 33 | 34 |
| 9-2203356-0 | AHE | B | GRAY | | | | | | | | | 9 | | 11 | | 13 | | | | | | | | | 22 | | | | | | 28 | 29 | 30 | 31 | 32 | 33 | 34 |
| 8-2203356-9 | AHD | A | BLACK | | | | | | | | | | | | | | 14 | | | | | | 20 | 21 | | 23 | 24 | 25 | 26 | 27 | 28 | 29 | 30 | 31 | 32 | 33 | 34 |
| 8-2203356-8 | AHC | A | BLACK | | | | | | | | | 9 | | | | | 14 | | | | | | 20 | 21 | | 23 | 24 | 25 | 26 | 27 | 28 | 29 | 30 | 31 | 32 | 33 | 34 |
| 8-2203356-7 | AHB | A | BLACK | | | | | | | | | | | | 12 | 13 | | | | | 18 | 19 | | | | | | | 26 | | | | | | 32 | 33 | |
| 8-2203356-6 | AHA | B | GRAY | | | | | | | | | | | | | 13 | | 15 | 16 | 17 | 18 | 19 | 20 | 21 | 22 | 23 | | 25 | 26 | 27 | 28 | 29 | 30 | | 32 | 33 | |
| 8-2203356-5 | AGZ | A | BLACK | | | | | | | | | 9 | 10 | 11 | | | 14 | | 16 | 17 | 18 | 19 | 20 | | | | 24 | | | 27 | | 29 | 30 | 31 | | | |
| 8-2203356-4 | AGY | A | BLACK | | | | | | | | | 9 | 10 | 11 | | | | | | | | | | | | | 24 | | | 27 | | 29 | | | | | |
| 8-2203356-3 | AGX | A | BLACK | | | | | | | | | 9 | | | 12 | 13 | | 15 | | 17 | 18 | 19 | 20 | 21 | 22 | | 24 | 25 | 26 | | 28 | | | 31 | 32 | 33 | |
| 8-2203356-2 | AGW | B | GRAY | | | | | | | | | 9 | | | | | 14 | | | | | | | 21 | | 23 | 24 | 25 | 26 | 27 | 28 | 29 | 30 | 31 | 32 | 33 | 34 |
| 8-2203356-1 | AGV | B | GRAY | | | | | | | | | | | | | | 14 | | | | | | | 21 | | 23 | 24 | 25 | 26 | 27 | 28 | 29 | 30 | 31 | 32 | 33 | 34 |
| 8-2203356-0 | AGU | B | GRAY | | | | | | | | | 9 | | 11 | | 13 | 14 | | | | | | | 21 | 22 | 23 | 24 | 25 | 26 | 27 | 28 | 29 | 30 | 31 | 32 | 33 | 34 |
| 7-2203356-9 | AGT | A | BLACK | | | | | | | | | 9 | | | 12 | 13 | | | | | 18 | 19 | | | | | | | 26 | | | | | | | 33 | |
| 7-2203356-8 | AGS | A | BLACK | | | | | | | | | 9 | | | 12 | 13 | | | | | 18 | 19 | | | 22 | | | | 26 | | | | | | | 33 | |
| 7-2203356-7 | AGR | A | BLACK | | | | | | | | | | | | 12 | 13 | | | | | 18 | 19 | | | 22 | | | | 26 | | | | | | | 33 | |
| 7-2203356-6 | AGQ | A | BLACK | | | | | | | | | 9 | | | 12 | | | | | | 18 | 19 | | | 22 | | | | 26 | | | | | | | 33 | |
| 7-2203356-5 | AGP | A | BLACK | | | | | | | | | 9 | | | 12 | 13 | | 15 | | 17 | 18 | 19 | 20 | 21 | | | | 25 | 26 | | 28 | | | 31 | 32 | 33 | |
| 7-2203356-4 | AGO | A | BLACK | | | | | | | | | 9 | | | 12 | 13 | | 15 | | 17 | 18 | 19 | 20 | 21 | | | 24 | 25 | 26 | | 28 | | | 31 | 32 | 33 | |
| 7-2203356-3 | AGN | A | BLACK | | | | | | | | | 9 | | | 12 | 13 | | 15 | | 17 | 18 | 19 | 20 | 21 | 22 | | | 25 | 26 | | 28 | | | 31 | 32 | 33 | |
| 7-2203356-2 | AGM | A | BLACK | | | | | | | | | 9 | | | 12 | 13 | | | | | 18 | 19 | 20 | | | | | | 26 | | | | | | 32 | 33 | |
| 7-2203356-1 | AGL | A | BLACK | | | | | | | | | | | | 12 | 13 | | | | | 18 | 19 | 20 | | | | | | 26 | | | | | | 32 | 33 | |
| 7-2203356-0 | AGK | B | GRAY | | | | | | | | | 9 | | 11 | | 13 | 14 | | | | | | | | 22 | 23 | 24 | 25 | 26 | 27 | 28 | 29 | 30 | 31 | 32 | 33 | 34 |
| 6-2203356-9 | AGJ | B | GRAY | | | | | | | | | 9 | | | | | 14 | | | | | | | | | 23 | 24 | 25 | 26 | 27 | 28 | 29 | 30 | 31 | 32 | 33 | 34 |
| 6-2203356-8 | AGI | B | GRAY | | | | | | | | | | | | | | 14 | | | | | | | | | 23 | 24 | 25 | 26 | 27 | 28 | 29 | 30 | 31 | 32 | 33 | 34 |
| 6-2203356-7 | AGH | A | BLACK | | | | | | | | | | | | 12 | | | | | | | | | 21 | | | | | | | | | | | | | |
| 6-2203356-6 | AGG | A | BLACK | | | | | | | | | | | | 12 | 13 | 14 | | | | | | | 21 | | | 24 | 25 | 26 | 27 | 28 | 29 | | 31 | | | |
| 6-2203356-5 | AGF | A | BLACK | | | | | | | | | 9 | | | 12 | | | | | | | | | 21 | | | | | | | | | | | | | |
| 6-2203356-4 | AGE | A | BLACK | | | | | | | | | | | | 12 | 13 | 14 | | | | | | | 21 | | 23 | | | 26 | 27 | 28 | 29 | | | | | |
| 6-2203356-3 | AGD | A | BLACK | | | | | | | | | 9 | | | 12 | 13 | 14 | | | | | | | 21 | | 23 | | | 26 | 27 | 28 | 29 | | | | | |
| 6-2203356-2 | AGC | A | BLACK | | | | | | | | | | | 11 | 12 | 13 | 14 | 15 | | | | 19 | | 21 | | | 24 | 25 | 26 | 27 | 28 | 29 | | 31 | | | |
| 6-2203356-1 | AGB | A | BLACK | | | | | | | | | | | 11 | 12 | | | 15 | | | | 19 | | 21 | | | | | | | | | | | | | |
| 6-2203356-0 | AGA | A | BLACK | | | | | | | | | 9 | | 11 | 12 | | | 15 | | | | 19 | | 21 | | | | | | | | | | | | | |
| 5-2203356-9 | AFZ | A | BLACK | | | | | | | | | 9 | | | | | | | | | | | | 21 | | | | | | | | | | | | | |
| 5-2203356-8 | AFY | A | BLACK | | | | | | | | | | | | 12 | | | | | | | | | | | | 24 | 25 | | 27 | | | | 31 | | | |
| 5-2203356-7 | AFX | A | BLACK | | | | | | | | | 9 | | 11 | | | | 15 | | | | 19 | | 21 | 22 | | | | | | | | | | 32 | 33 | |
| 5-2203356-6 | AFW | A | BLACK | | | | | | | | | | | | | | | | | | | | | 21 | | | | | | | | | | | | | |
| 5-2203356-5 | AFV | A | BLACK | | | | | | | | | 9 | | 11 | 12 | 13 | 14 | 15 | | | | 19 | | 21 | | 23 | | | 26 | 27 | 28 | 29 | | | | | |
| 5-2203356-4 | AFU | A | BLACK | | | | | | | | | | | 11 | 12 | 13 | 14 | 15 | | | | 19 | | 21 | | 23 | | | 26 | 27 | 28 | 29 | | | | | |
| 5-2203356-3 | AFT | A | BLACK | | | | | | | | | 9 | | 11 | | | | 15 | | | | 19 | | 21 | | | | | | | | | | | | | |
| 5-2203356-2 | AFS | A | BLACK | | | | | | | | | 9 | | 11 | 12 | 13 | 14 | 15 | | | | 19 | | 21 | | | 24 | 25 | 26 | 27 | 28 | 29 | | 31 | | | |
| 5-2203356-1 | AFR | A | BLACK | | | | | | | | | 9 | | | 12 | 13 | 14 | | | | | | | 21 | | | 24 | 25 | 26 | 27 | 28 | 29 | | 31 | | | |
| 5-2203356-0 | AFQ | A | BLACK | | | | | | | | | 9 | | 11 | 12 | 13 | 14 | 15 | | | | 19 | | 21 | 22 | | 24 | 25 | 26 | 27 | 28 | 29 | | 31 | 32 | 33 | |
| 4-2203356-9 | AFP | A | BLACK | | | | | | | | | | | | 12 | | | | | | 18 | 19 | | | 22 | | | | 26 | | | | | | | 33 | |
| 4-2203356-8 | AFO | A | BLACK | | | | | | | | | | | | 12 | 13 | | | | | 18 | 19 | | 21 | | | | | 26 | | | | | 31 | 32 | 33 | |
| 4-2203356-7 | AFN | A | BLACK | | | | | | | | | | | | 12 | 13 | | | | | 18 | 19 | | | | | | | 26 | | | | | | | 33 | |
| 4-2203356-6 | AFM | B | GRAY | | | | | | | | | 9 | 10 | 11 | | | 14 | | 16 | 17 | | | 20 | 21 | | | 24 | 25 | | | | | 30 | 31 | | 33 | |
| 4-2203356-5 | AFL | B | GRAY | | | | | | | | | 9 | 10 | 11 | | | | | | | | | 20 | | | | 24 | | | | | | 30 | 31 | | 33 | |
| 4-2203356-4 | AFK | B | GRAY | | | | | | | | | 9 | 10 | 11 | | | 14 | | 16 | 17 | 18 | | 20 | 21 | | | 24 | 25 | 26 | 27 | 28 | 29 | 30 | 31 | | 33 | |
| 4-2203356-3 | AFJ | A | BLACK | | | | | | | | | | | | 12 | 13 | | 15 | | | 18 | 19 | | | | | | | 26 | | | | | | | 33 | |
| 4-2203356-2 | AFI | A | BLACK | | | | | | | | | | | 11 | | | | 15 | | | | 19 | | | 22 | 23 | | | | | | | | | 32 | 33 | |
| 4-2203356-1 | AFH | B | GRAY | | | | | | | | | 9 | 10 | 11 | | | | | | | | | | | | | 24 | | | | | | 30 | 31 | | 33 | |
| 4-2203356-0 | AFG | B | GRAY | | | | | | | | | 9 | 10 | 11 | | | 14 | | 16 | 17 | 18 | | | 21 | | | 24 | 25 | 26 | 27 | 28 | 29 | 30 | 31 | | 33 | |
| 3-2203356-9 | AFF | B | GRAY | | | | | | | | | 9 | 10 | 11 | | | 14 | | 16 | 17 | | | | 21 | | | 24 | 25 | | | | | 30 | 31 | | 33 | |
| 3-2203356-8 | AFE | A | BLACK | | | | | | | | | 9 | | 11 | | | | 15 | | | | 19 | | | 22 | | 24 | 25 | | | | | | 31 | 32 | 33 | |
| 3-2203356-7 | AFD | A | BLACK | | | | | | | | | | | | 12 | | | 15 | | | 18 | 19 | | | 22 | | | | 26 | | | | | | | 33 | |
| 3-2203356-6 | AFC | A | BLACK | | | | | | | | | | | | 12 | 13 | | 15 | | | 18 | 19 | | | | | | | 26 | | | | | | 32 | 33 | |
| 3-2203356-5 | AFB | A | BLACK | | | | | | | | | | | | 12 | 13 | | 15 | | | 18 | 19 | | 21 | | | | | 26 | | | | | 31 | 32 | 33 | |
| 3-2203356-4 | AFA | A | BLACK | | | | | | | | | 9 | | 11 | | 13 | 14 | 15 | | | | 19 | | | 22 | 23 | 24 | 25 | 26 | 27 | 28 | 29 | | 31 | 32 | 33 | |
| 3-2203356-3 | AEZ | A | BLACK | | | | | | | | | | | | | | | | | | | | | | 22 | 23 | | | | | | | | | 32 | 33 | |
| 3-2203356-2 | AEY | A | BLACK | | | | | | | | | | | 11 | | 13 | 14 | 15 | | | | 19 | | | 22 | 23 | 24 | 25 | 26 | 27 | 28 | 29 | | 31 | 32 | 33 | |

CIRCUITS 1 THRU 8 REMAIN OPEN

BLOCKED CAVITIES INDICATED BY A NUMERIC SYMBOL IN THAT CIRCUIT LOCATION

THIS DRAWING IS A CONTROLLED DOCUMENT.

DIMENSIONS: mm

TOLERANCES UNLESS OTHERWISE SPECIFIED:
0 PLC ±0.3
1 PLC ±0.1
2 PLC ±0.1
3 PLC ±0.1
4 PLC ±0.1
ANGLES ±1°

MATERIAL -
FINISH -

DWN DL DRUMMOND 19OCT2004
CHK RL COBLE 19OCT2004
APVD RL COBLE 19OCT2004
PRODUCT SPEC -
APPLICATION SPEC -
WEIGHT -

TE Connectivity

NAME CAP ASSEMBLY, 34 WAY, SEALED, HYBRID, MALE

SIZE A0 | CAGE CODE 00779 | DRAWING NO C-1438842 | RESTRICTED TO -

CUSTOMER DRAWING | SCALE 2:1 | SHEET 4 OF 5 | REV A35

4806 (3/13)

THIS DRAWING IS UNPUBLISHED. RELEASED FOR PUBLICATION 20
© COPYRIGHT 20 BY - ALL RIGHTS RESERVED.

REVISIONS

| P | LTR | DESCRIPTION | DATE | DWN | APVD |
|---|---|---|---|---|---|
| | - | SEE SHEET 1 | - | - | - |

CIRCUITS 1 THRU 8 REMAIN OPEN

| TE P/N | PINOUT ID CODE | INDEX (KEY) | COLOR | 1 | 2 | 3 | 4 | 5 | 6 | 7 | 8 | 9 | 10 | 11 | 12 | 13 | 14 | 15 | 16 | 17 | 18 | 19 | 20 | 21 | 22 | 23 | 24 | 25 | 26 | 27 | 28 | 29 | 30 | 31 | 32 | 33 | 34 |
|---|---|---|---|---|---|---|---|---|---|---|---|---|---|---|---|---|---|---|---|---|---|---|---|---|---|---|---|---|---|---|---|---|---|---|---|---|---|
| 2318701-1 | AHO | A | BLACK | | | | | | | | | | 10 | | 12 | | 14 | 15 | 16 | | | | | | | 23 | | | | | | | | | | 33 | 34 |

BLOCKED CAVITIES INDICATED BY A NUMERIC SYMBOL IN THAT CIRCUIT LOCATION

THIS DRAWING IS A CONTROLLED DOCUMENT.

DIMENSIONS: mm

TOLERANCES UNLESS OTHERWISE SPECIFIED:
0 PLC ±0.3
1 PLC ±0.3
2 PLC ±0.1
3 PLC ±0.1
4 PLC ±0.1
ANGLES ±1°

MATERIAL - -
FINISH - -

DWN BL DRUMMOND 190CT2004
CHK KL COBLE 190CT2004
APVD KL COBLE 190CT2004
PRODUCT SPEC - -
APPLICATION SPEC - -
WEIGHT - -

TE Connectivity

NAME CAP ASSEMBLY, 34 WAY, SEALED, HYBRID, MALE

SIZE A0 | CAGE CODE 00779 | DRAWING NO C-1438842 | RESTRICTED TO -

CUSTOMER DRAWING | SCALE 2:1 | SHEET 5 OF 5 | REV A35