HALOGEN FREE

REV	ECR	DESCRIPTION	DATE	DRAWN	CHECKED	APPROVED
X1	SZECR14277	NEW RELEASE PER NPR14073	09/19/15"	RUI.SU	AIR CHEN	

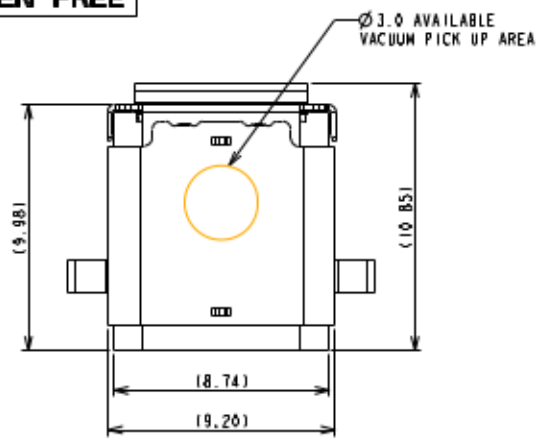

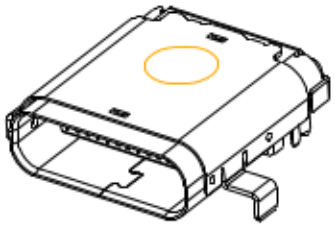

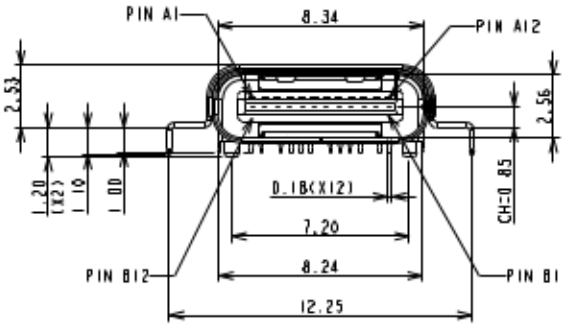

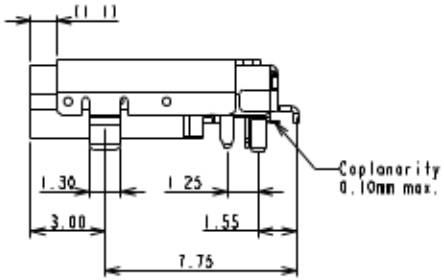

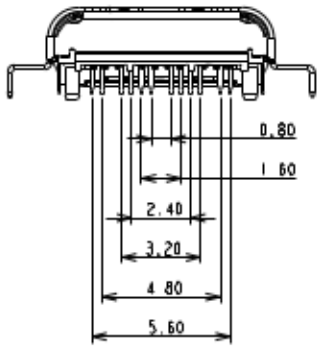

TABLE A: PRODUCT NUMBERING CODE
PRODUCT NUMBERING CODE

C-BR20- A K X X X
① ② ③ ④ ⑤ ⑥

1 CONNECTOR TYPE
BR20 : USB TYPE- C FULL FEATURE CONN.
RECEPTACLE - MID MOUNT TYPE

2.NO. OF POSITION:
A: 24 POSITIONS

3.COLOR OF INSULATOR:
K: BLACK

4.PLATING OF CONTACT:
1: GOLD FLASH ON CONTACT AREA.
5: Au 30u" PLATING ON CONTACT AREA.

5 PLATING OF FRONT SHELL
1 SOLDERING NICKEL

6 OTHER
1: SHELL HOLD DOWN 1.1mm)

(DESIGNED TO MEET USB TYPE C SPECIFICATION)

CONN ADD LASER WELDING POSITION

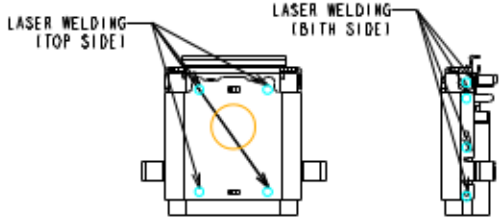

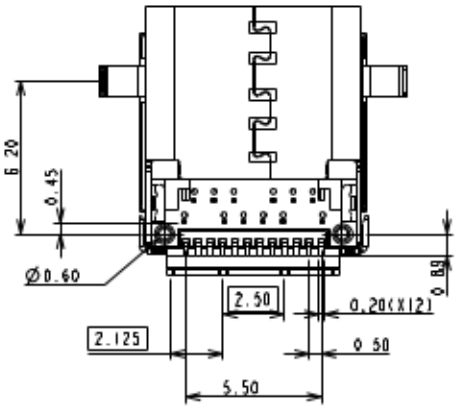

TABLE B:

PIN NO.	A1	A2	A3	A4	A5	A6	A7	A8	A9	A10	A11	A12
SIGNAL NAME	GND	SSTXp1	SSTXn1	VBUS	CC1	Dp1	Dn1	SBU1	VBUS	SSRXn2	SSRXp2	GND
PIN NO.	B12	B11	B10	B9	B8	B7	B6	B5	B4	B3	B2	B1
SIGNAL NAME	GND	SSRXp1	SSRXn1	VBUS	SBU2	Dn1	Dp1	CC2	VBUS	SSTXn2	SSTXp2	GND

ITEM	NAME	Q'TY	PART #	MATERIAL / FINISH
6	OUTER SHELL	1	S- BR20-20000	METAL / Ni PLATED
5	SHELL	1	S- BR20-10000	METAL / Ni PLATED
4	EMI RING	2	H- BR25-E0000	METAL / Ni PLATED
3	GROUND PLATE	1	H- BR20-G0000	METAL / Ni PLATED
2	CONTACT	24	T- BR20-X0000	COPPER ALLOY / Au PLATED
1	HALF PRODUCT	2	BR20-XX0022	HI-TEMP G.F UL94V-0

TOLERANCES UNLESS OTHERWISE SPECIFIED
GENERAL ±
ANGLES ±°

		DATE
DRAWN	RUI.SU	09/19/15"
DESIGN	RUI.SU	09/19/15"
CHECKED	AIR CHEN	09/19/15"
APPROVED		

SCALE 2:1
SHEET 1 OF 2
UNIT mm

C-BR20-AK511

CnC Tech, LLC

TITLE: USB TYPE - C 3.1 (10Gbps) CONN RECEPTACLE - MID MOUNT TYPE

SERIES: BR20 SERIES
SIZE: A3
DWG NO.: C- BR20-00-05
REV: X1

HALOGEN FREE

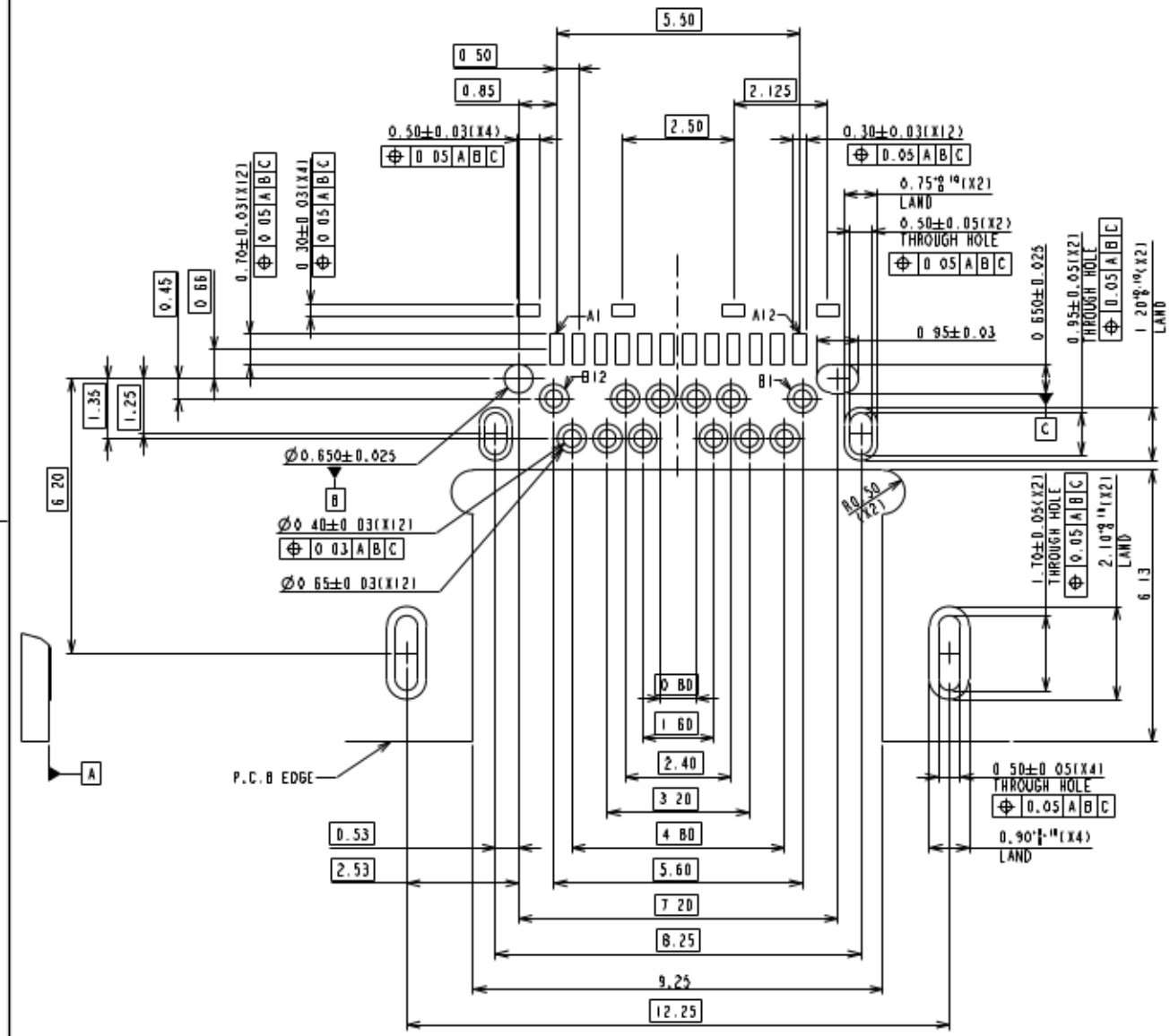

RECOMMENTED PCB LAYOUT
THICKNESS IS 0.9mm
TOLERANCE ± 0.05

NOTES:

1.0. ELECTRICAL CHARACTERISTICS:

1.1. LOW LEVEL CONTACT RESISTANCE:
INITIAL: 40mΩ FOR ALL CONTACT MAX.
AFTER : 10mΩ MAX. CHANGE

1.2 DIELECTRIC WITHSTANDING VOLTAGE:
100 VAC FOR 1 MINUTE SEA LEVEL

1.3 INSULATION RESISTANCE:
100MΩ MIN.

1.4 CURRENT RATING:
VBUS AND GND CONTACTS RATED AT 1.25A EA., PARALLELED FOR A TOTAL OF 5A.

2.0. MECHANICAL CHARACTERISTICS.

2.1 INSERTION FORCE 20N MAX

2.2 EXTRACTION FORCE
DURABILITY 1~1000 CYCLES 8N MIN. 20 N MAX.
DURABILITY 1001~10000 CYCLES 6N MIN. 20 N MAX.

2.3 DURABILITY : 10,000 CYCLES

3.0 OPERATING TEMPERATURE: -40°C TO +85°

TABLE C : PIN NO (TOP VIEW)

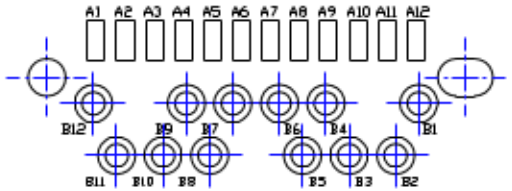

DRAWN	RUI SU	09/19/15	CnC Tech, LLC
DESIGN	RUI SU	09/19/15	
CHECKED	AIR CHEN	09/19/15	TITLE: USB TYPE - C 3.1 (10Gbps) CONN RECEPTACLE - MID MOUNT TYPE
APPROVED		DATE	
SCALE 4:1			
SHEET 2 OF 2			
UNIT mm	C-BR20-AK511		SERIES BR20 SERIES; SIZE A3; DWG NO. C- BR20-00-05; REV X1