D1RFRD006

REVISION RECORD				
REV	ECO	DESCRIPTION	DRFT	CHKD
1		Modify Drawing	Yuki 06/03/06'	

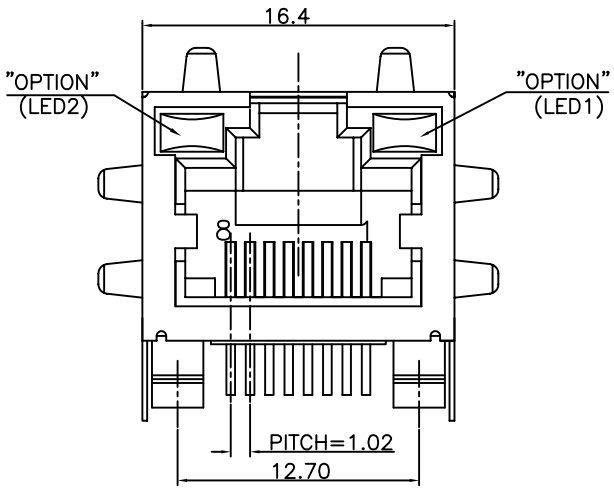

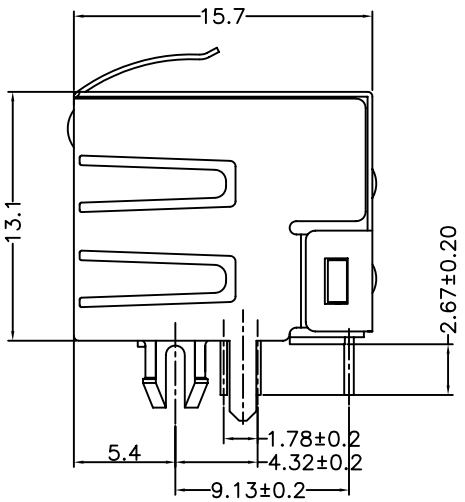

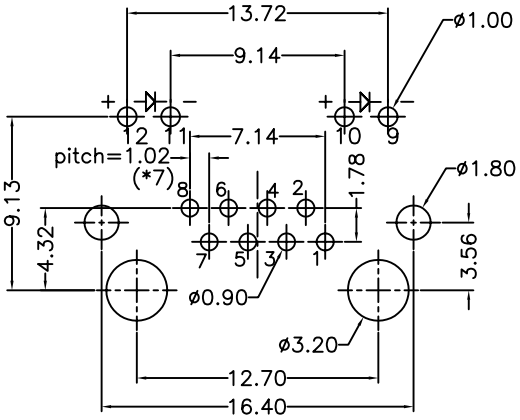

PC Board (t=1.60mm) Layout

Component Side Shown

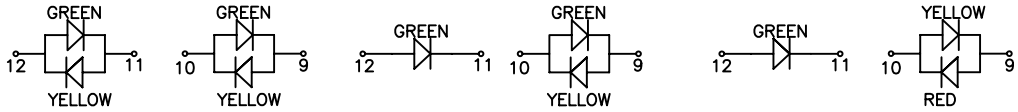

FOR P/N:E5J88-4XLOXX-L 1 FOR P/N:E5J88-KXLOXX-L FOR P/N:E5J88-PXLOXX-L

NOTES:

ELECTRICAL:

1. VOLTAGE RATING : 125 VAC RMS.
2. CURRENT RATING : 1.5 AMP.
3. CONTACT RESISTANCE : 30 MILLIOHMS MAX.
4. INSULATION RESISTANCE: 1000 MEGOHMS MIN @ 500 VDC.
5. DIELECTRIC STRENGTH : 1000 VAC RMS 60Hz, 1MIN.
6. LED RATINGS: FORWARD VOLTAGE: 2.2 VOLTS TYPICAL.
   REVERSE VOLTAGE: 5 VOLTS MAXIMUM.
7. OPERATING: 750 CYCLES MIN.

MECHANICAL:

1. HOUSING MATERIAL : FR52 UL94V-0. COLOR-BLACK.
2. INSERT MATERIAL : FR52 UL94V-0. COLOR-BLACK.
3. BACK PLATE MATERIAL : FR52. COLOR-BLACK.
4. LED SIZE : 3.2*2.0*4.0*P=2.54mm. 1
5. SHIELD MATERIAL : COPPER ALLOY 0.25mm THICKNESS PLATING NI.
6. CONTACT MATERIAL : PHOSPHOR BRONZE 0.35mm THICKNESS OR ø0.46mm.
7. PLATING : GOLD PLATING OVER NICKEL.
8. PCB RETENTION PRE-SOLDER : 1 LB MIN.
9. PCB RETENTION POST-SOLDER: 10 LBS MIN.

ENVIRONMENTAL:

1. STORAGE : -40°C TO +85°C.
2. OPERATION : -40°C TO +85°C. 1
3. WAVE SOLDERING TEMPERRATURE: 255~265°C (5~10 SECONDS) 1

MATES WITH MODULAR PLUG CONFORMING TO
FCC PART 68, SUBPART F.
CUL FILE NO. E163191

PART NUMBER: E 5J 8 8 - X X L J X X-L

1-LED1:GREEN ,LED2:YELLOW .
2-LED1:GREEN ,LED2:GREEN .
3-LED1:YELLOW ,LED2:GREEN .
4-LED1:G+Y ,LED2:G+Y .
5-LED1:RED ,LED2:GREEN .
7-LED1:YELLOW ,LED2:YELLOW .
K-LED1:G+Y ,LED2:GREEN
P-LED1:Y+R ,LED2:GREEN

1-NO TAB
2-TOP TABS.
3-SIDE TABS.
4-TOP TABS & SIDE TABS.

PLATING:1-3u"
2-6u"
3-15u"
4-30u"
5-50u"

C-"LED TYPE" TIN LEAD SHIELD STAMPED PIN.
D-"LED TYPE" NI LEAD SHIELD STAMPED PIN.
J-"LED TYPE" NI LEAD SHIELD ROUND PIN.
K-"LED TYPE" TIN LEAD SHIELD ROUND PIN.

MM (INCH)	DFTO Jake	DATE 05/05/'04	FULL RISE ELECTRONIC CO., LTD
TOLERANCES EXCEPT AS NOTED	CHKD ASHELLY	DATE 2006/6/3	
MM .0 ±0.20 ± .00 ±0.15 ± .000 ±0.075 ±	MFO	DATE	TITLE RJ45 SIDE ENTRY LED JACK
	APPVL LUSHENG	DATE 2006/6/3	
DETACHED LISTS	MATERIAL :		
ANGLES ±	QT'Y :		DRAWING NO. GE5J3139 / PART NO. SEE NOTE
THIRD ANGLE PROJECTION	FINISH :		SIZE A3 REV 1 06/03/06'
	SCALE : 25:7		DO NOT SCALE DRAWING SHEET X OF Y