NOTES:

1. THIS HOUSING FOR USE WITH MOLEX (2,39)/.093 DIA. MALE TERMINALS.
2. MOUNTING EARS OPTIONAL (SEE CHART).

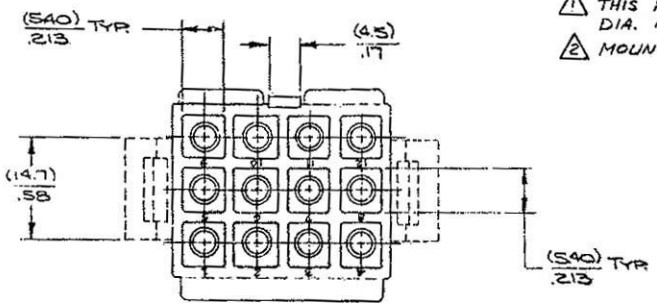

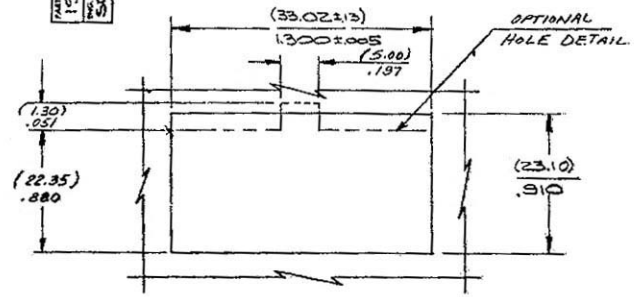

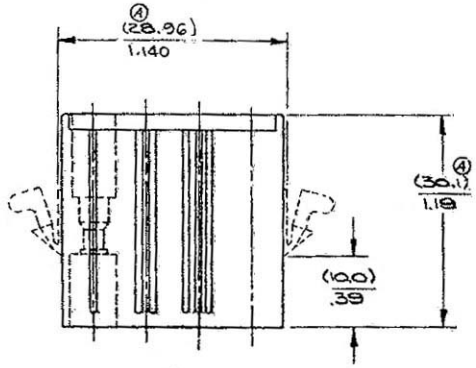

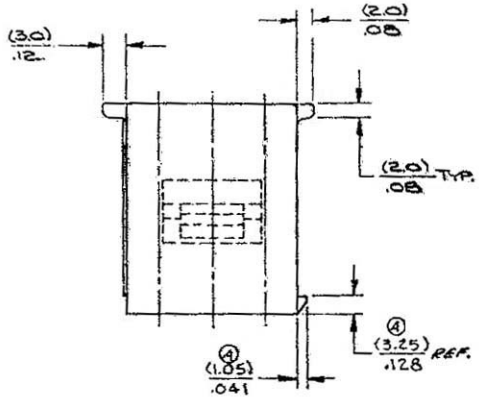

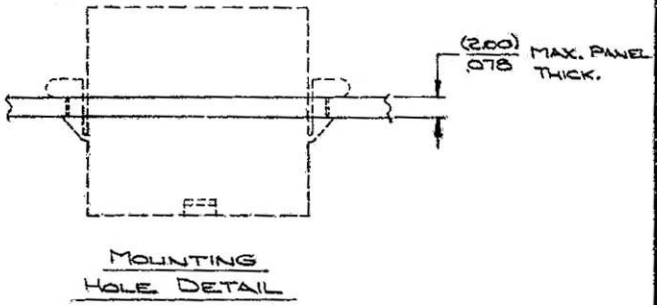

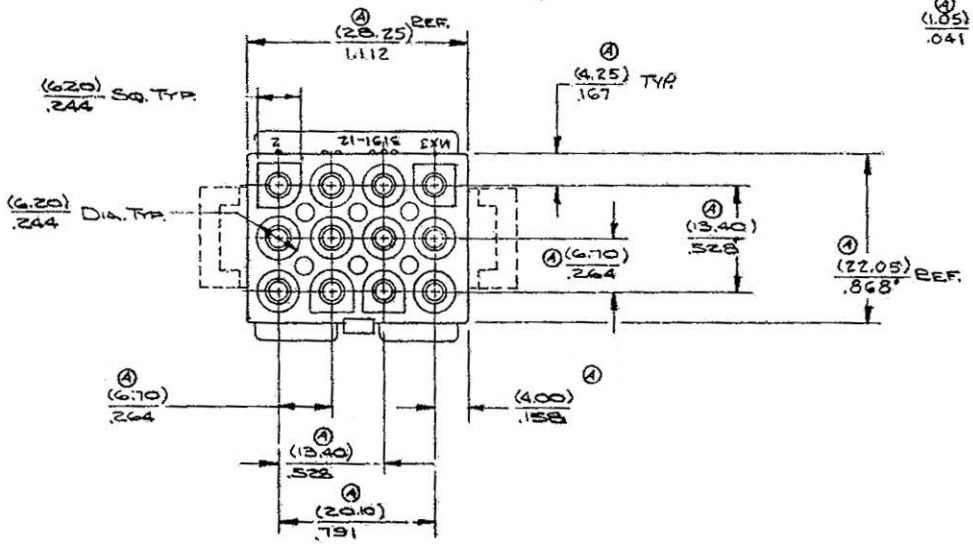

PART NO.	ENG. NO.	MTG. EARS	MATERIAL
NOT TOOLED	SDX-3191-12P 1-D	NO	NYLON 6/6, 94V-2, COLOR: NATURAL
NOT TOOLED	SDX-3191-12P -D	YES	(-D INDICATES DYED)
19-09-4121	SD-3191-12P -203	YES	ASAHILEONA FR-200
19-09-4122	SD-3191-12P 1-203	NO	ASAHILEONA FR-200
NOT TOOLED	SDX-3191-12P 1-202	YES	MOD. NYLON 6/6 94V-0 DUPONT FE-3016
NOT TOOLED	SDX-3191-12P -202	NO	MOD. NYLON 6/6 94V-0 DUPONT FE-3016
NOT TOOLED	SDX-3191-12P 1-200	TES	MOD. NYLON 6/6 94V-0 MONSANTO M340
NOT TOOLED	SDX03191-12P -200	NO	MOD. NYLON 6/6 94V-0 MONSANTO M340
19-09-2126	SD-3191-12P 1-201	NO	MOD. NYLON 6/6 94V-0 WELLAMID FR22-FN
19-09-2127	SD-3191-12P -201	YES	MOD. NYLON 6/6 94V-0 WELLAMID FR22-FN
19-09-2129	SD-3191-12P 1	NO	NYLON TYPE 6/6 94V-2
19-09-2128	SD-3191-12P	YES	NYLON TYPE 6/6 94V-2

REVISIONS

LTR.	DESCRIPTION	DATE	BY
D	ADD DYED PARTS	8-5-85	JCS
C	FINAL RELEASE	12-20-82	
B	ADDED NEW MATL. PER ECO 3693	9-27-82	
A	FINAL RELEASE	8-26-80	
1	X-RELEASE	11-15-74	

DIMENSION SHOWN (MILLIMETERS) / INCH
UNLESS OTHERWISE SPECIFIED TOLERANCES:
2 PLACE ± .010 ± 0.25
3 PLACE ± .014 ± 0.35
ANGULAR ± 1/2°
SHALL APPLY WHERE APPLICABLE (NOT SHOWN WITH DIMENSIONS)
UNLESS OTHERWISE SPECIFIED
DO NOT SCALE DRAWING

DRWN BY: W.R.L. DATE: 10/28/75
APPD BY: DATE:
SCALE 2X

TITLE: HOUSING - PLUG - 12 CIRCUIT (UNIVERSAL)

MOLEX INCORPORATED
USAL NO. 6888 E.I.A.

DATE 10/28/75

PART NO. 19-**-212*
ENG. NO. SD-3191-12P-*
C

AGEO

THIS DRAWING CONTAINS INFORMATION THAT IS PROPRIETARY TO MOLEX INC. AND SHOULD NOT BE USED WITHOUT WRITTEN PERMISSION.