PART No. 1420G16

for more information visit

www.hammfg.com

Data subject to change without notice

Isometric drawing Not to Scale

TOP VIEW

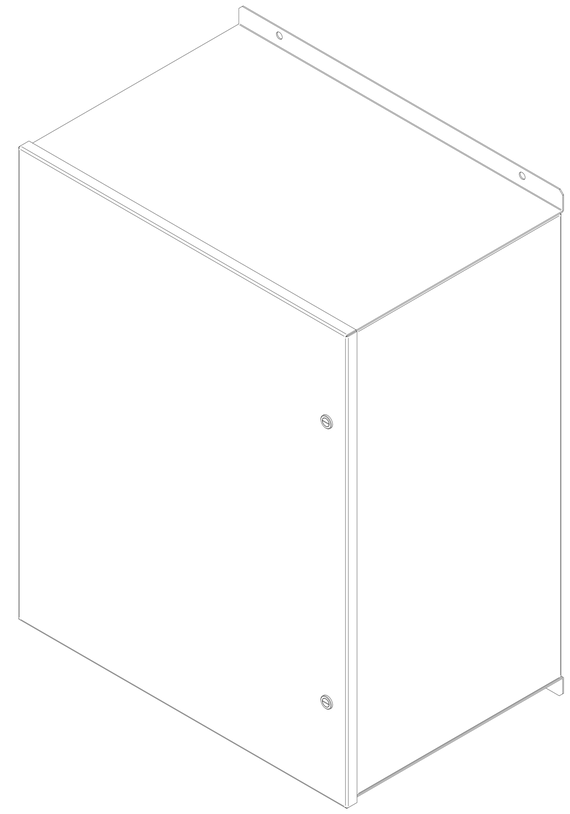

ISOMETRIC VIEW

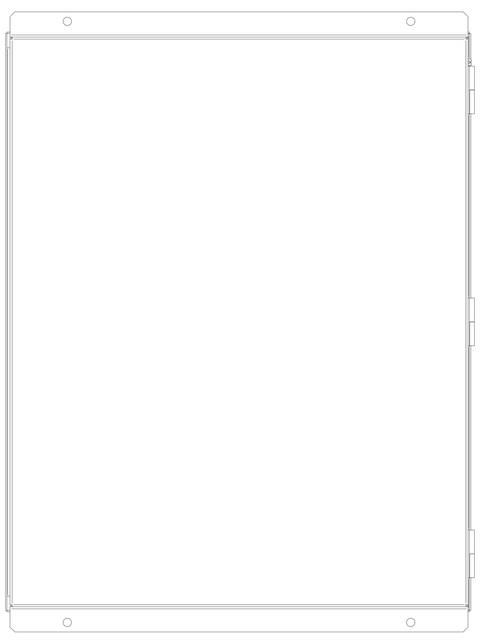

BACK VIEW

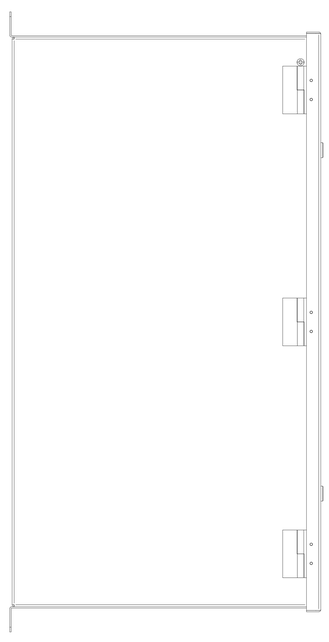

SIDE VIEW

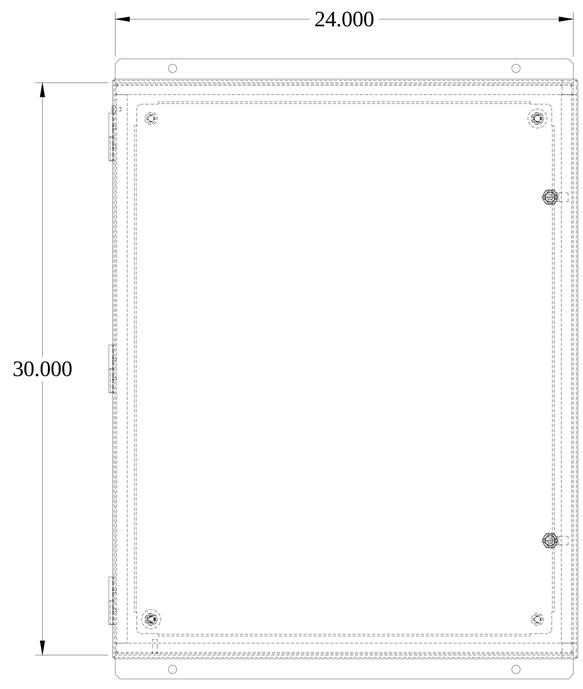

FRONT VIEW

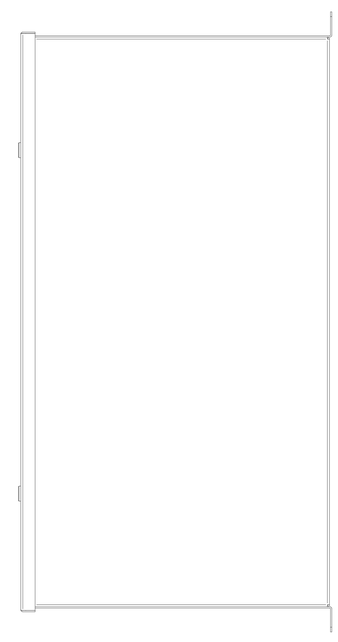

SIDE VIEW

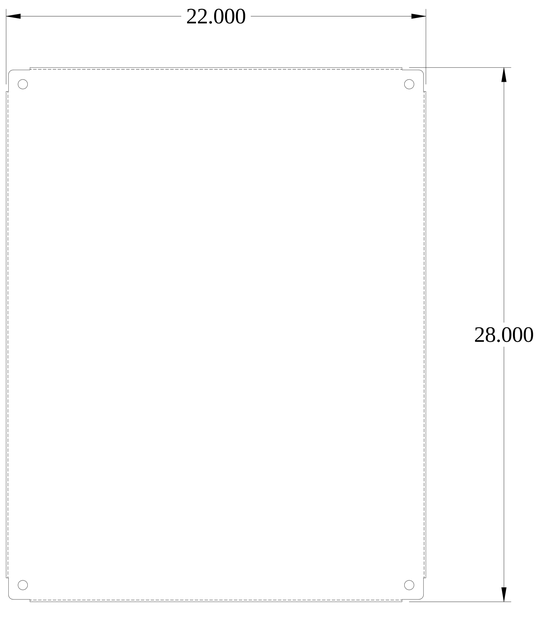

INNER PANEL

BOTTOM VIEW