NOTES:
1. ASSURE ASSEMBLY CAPABILITY BY MATCHING WITH MATING PART
2. DIMENSIONS IN [ ] ARE IN MILLIMETERS

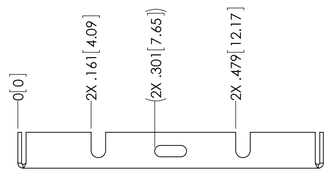

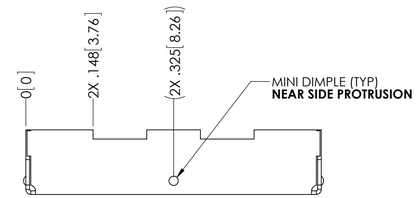

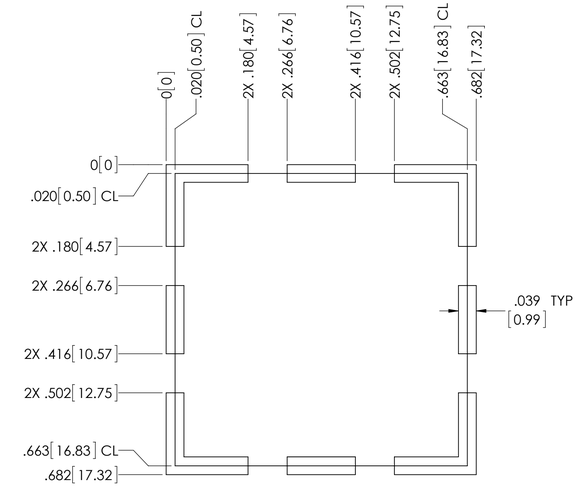

TRACE PATTERN

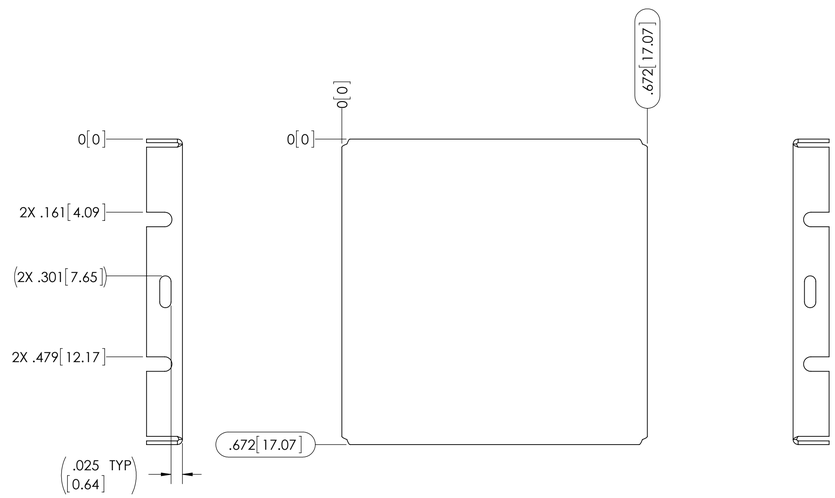

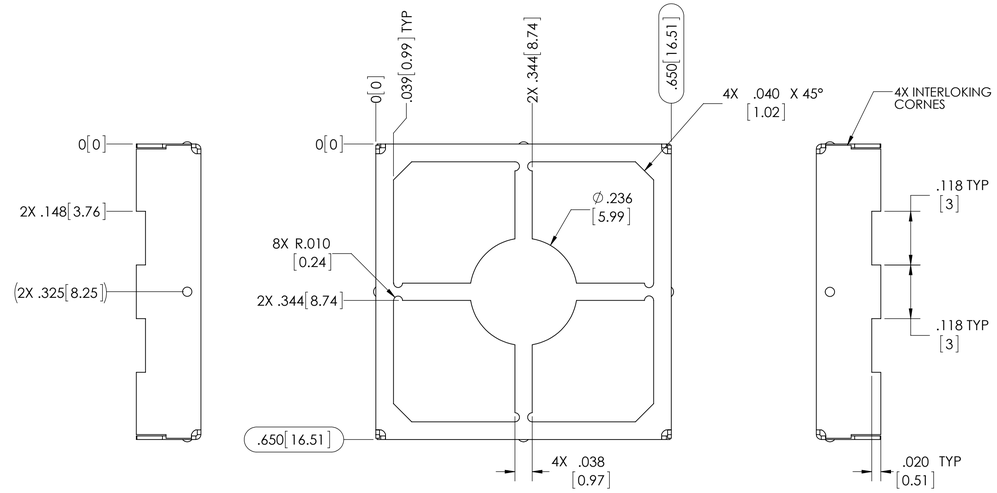

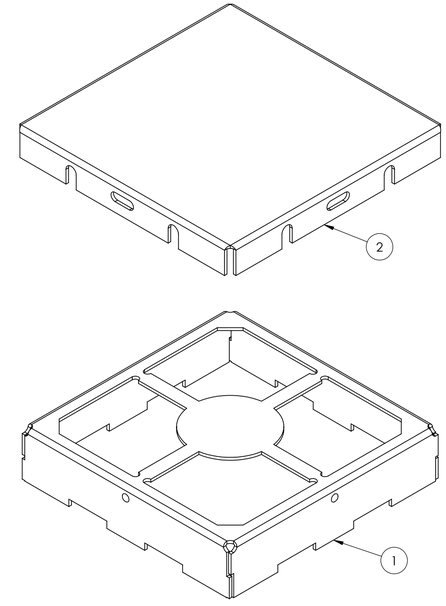

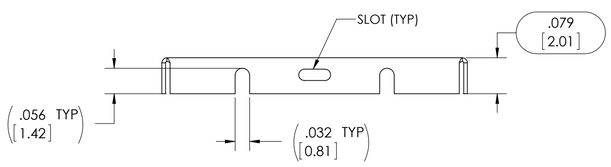

FORMED COVER

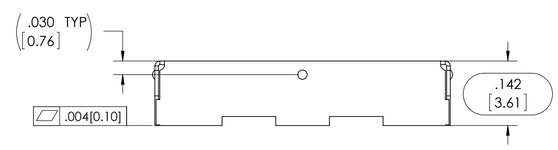

FORMED FRAME

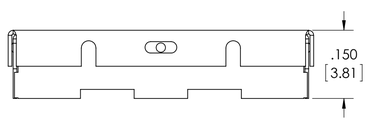

ASSEMBLY

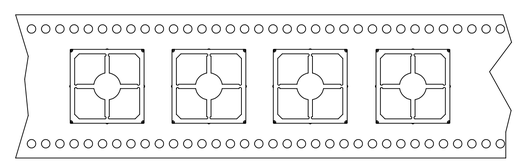

CARRIER TAPE

ITEM NO.	PART NUMBER	DESCRIPTION	QTY.
1	SMS-402F	FRAME	1
2	SMS-402C	COVER	1

CARRIER TAPE SPECIFICATIONS

PART NUMBER	DESCRIPTION	OVERALL DIMENSIONS	OVERALL HEIGHT	CARRIER TAPE WIDTH	CARRIER TAPE PITCH	PARTS PER REEL
SMS-402F	FRAME	.650 X .650 [16.51 X 16.51]	.142 [3.60]	32 mm	24 mm	700
SMS-402C	COVER	.672 X .672 [17.07 X 17.07]	.079 [2.01]	N/A	N/A	BULK PACK

UNLESS OTHERWISE SPECIFIED:
- ALL DIMENSIONS ARE IN INCHES
- PART SHALL BE FREE OF BURRS AND SHARP EDGES
- ALL DIMENSIONS SHOWN APPLY BEFORE PLATINGS AND COATINGS
- RoHS COMPLIANT PER EU DIRECTIVE 2011/65/EU
- POI = POINT OF INTERSECTION

THIRD ANGLE PROJECTION

.XXX +/- .005[0.13] .XX +/- .010[0.25] .X +/- .020[0.51] ANGLES +/- 2°

DRAWN BY: ACS 2015-04-16

APPROVED BY: Nick Demyanovich 2015.05.08 16:27:32 -04'00'

FINISH: MATTE

MATERIAL: .008"[0.20] PRE TIN STEEL

THIS DOCUMENT CONTAINS PROPRIETARY INFORMATION OWNED BY LEADERTECH, OR DEVELOPED AT ITS OWN PRIVATE EXPENSE, AND MAY NOT BE USED, DUPLICATED, OR DISCLOSED IN WHOLE OR IN PART FOR ANY PURPOSE INCLUDING DESIGN, MANUFACTURE OR PROCUREMENT WITHOUT THE WRITTEN PERMISSION OF LEADERTECH. LEADERTECH DOES NOT GUARANTEE OR WARRANTY THE PERFORMANCE CHARACTERISTICS.

LEADER TECH a HEICO company
Time Investing Ridge in EMI Shielding Technology

TITLE: SURFACE MOUNT SHIELD

SIZE: D | DWG. NO.: SMS-402 | REV: A

SCALE: 6:1 | CAGE CODE: 4J674 | SHEET: 1 OF 1