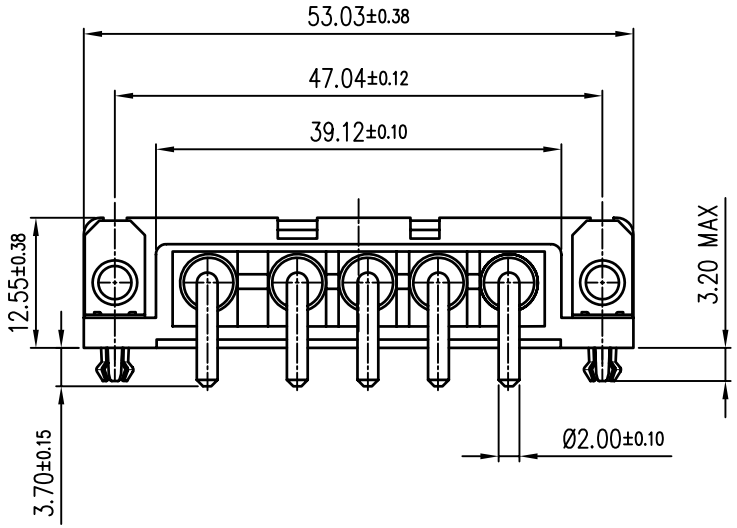

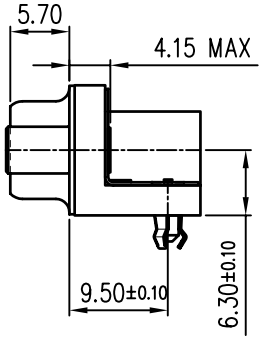

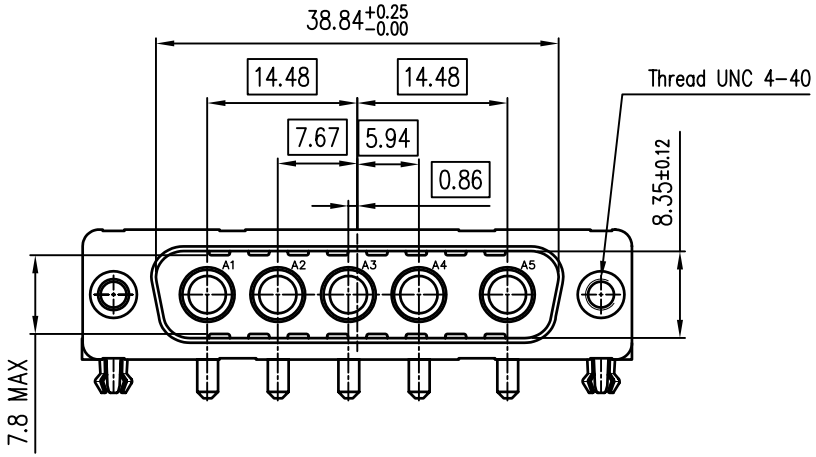

PC CARD DRILLING DIMENSIONS

Components side view – Thickness 1.60mm

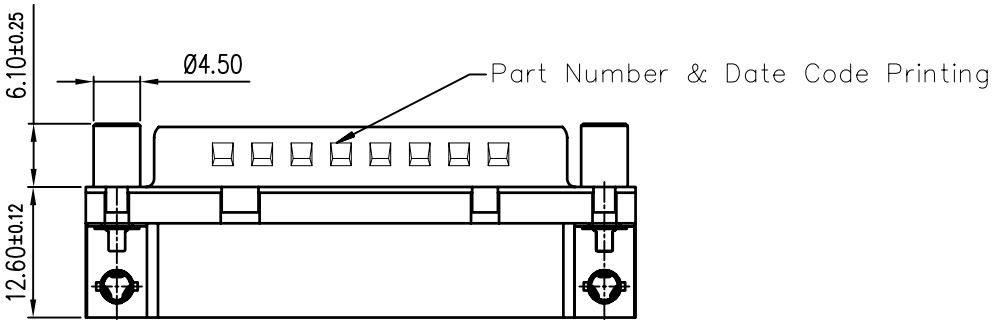

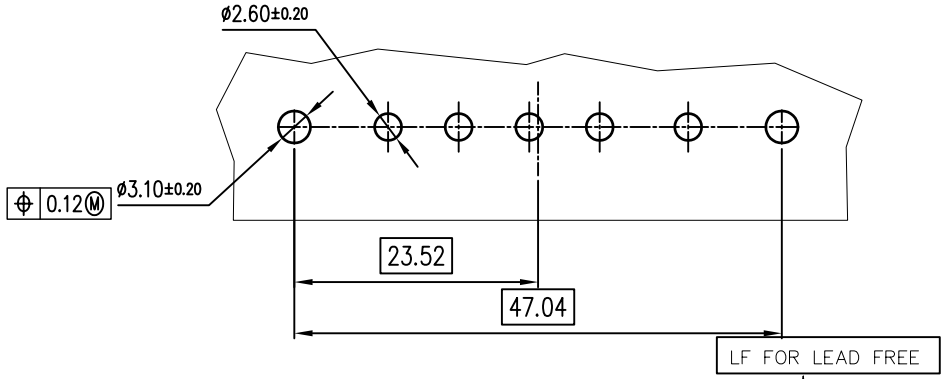

Part Number	D5W5P36B6GV08**

GENERAL CHARACTERISTICS AND ROHS INFORMATIONS:

SEE DRAWING C01-8646-0001

Technical characteristics:

- Material contacts – brass
  - Finish on contact area – gold 0.76µ mini over nickel
  - Finish on terminaison end – bright tin – lead over nickel

Shell: steel tin plated
Insulators: self-extinguishing thermoplastic, ULclass94V0
Grounding brackets: brass, tin plated
Female screwlock: brass, tin plated
Harpoon: brass , tin plated

Climatic characteristics:

Operating temperature range: −55°c +125°c

Dimensions:

in accordance with MIL-C-24308

rev	ecn no	dr	date
A	I10-0072	NG	2010-03-13
-	-	-	-
-	-	-	-
-	-	-	-
-	-	-	-
-	-	-	-
-	-	-	-

European Views

www.fciconnect.com			surface ISO 1302		tolerance std ISO 406 ISO 1101	projection	mm
			TOLERANCES UNLESS OTHERWISE SPECIFIED				
Dr	NIRMAL GEORGE	2010-03-13	ANGULAR	LINEAR	0.X ±0.1	size A3	Scale 2
Eng	NIRMAL GEORGE	2010-03-13			0.XX ±0.1		
Chr	NIRMAL GEORGE	2010-03-13	0.XX° ±2°		0.XXX ±0.1	ECN	I10-0072
Appr	SUDHIR VARMA	2010-03-13	Product family		D-SUB	Spec ref	-
title	D SUB R/A POWER CONNECTOR 5W5 Metal plate,Harpoon,Female Screw UNC4-40					dwg no C-DD-0138	Rev. A
catalog no			see table			CUSTOMER	sheet 1 of 1

REV F – 2006-04-17

Copyright FCI.

Printed: Jan 18, 2011
STATUS: Released
PDM: Rev:A