PART NUMBER	ITEM 1 BODY	ITEM 2 NUT	ITEM 3 CONTACT	ITEM 4 INSULATOR	ITEM 5 SPRING	ITEM 6 CRIMP SLEEVE	ITEM 7 END CAP
131-6433-101	BRASS GOLD PL .00001 MIN OVER NICKEL PL .00005 MIN OVER COPPER PL .00005 MIN	BRASS GOLD PL .00001 MIN OVER NICKEL PL .00005 MIN OVER COPPER PL .00005 MIN	BERYLLIUM COPPER GOLD PL .00003 MIN OVER NICKEL PL .00005 MIN OVER COPPER PL .00005 MIN	TEFLON	BERYLLIUM COPPER	COPPER GOLD PL .00001 MIN OVER NICKEL PL .00005 MIN OVER COPPER PL .00005 MIN	BRASS GOLD PL .00001 MIN OVER NICKEL PL .00005 MIN OVER COPPER PL .00005 MIN
131-6433-106	BRASS NICKEL PL .0001 MIN OVER COPPER PL .00005 MIN	BRASS NICKEL PL .0001 MIN OVER COPPER PL .00005 MIN	BERYLLIUM COPPER GOLD PL .00003 MIN OVER NICKEL PL .00005 MIN OVER COPPER PL .00005 MIN	TEFLON	BERYLLIUM COPPER	COPPER NICKEL PL .0001 MIN OVER COPPER PL .00005 MIN	BRASS NICKEL PL .0001 MIN OVER COPPER PL .00005 MIN

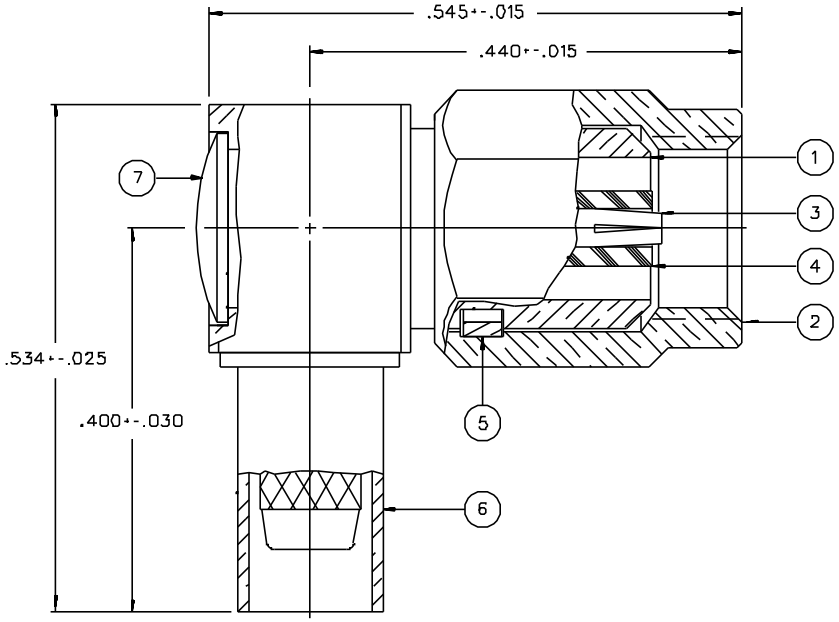

NOTES:

1. SPECIFICATIONS:

IMPEDANCE: 50 OHMS (MAIN BODY ONLY, USES 75 OHM CABLE)
FREQUENCY RANGE: 0-10 GHZ
VSWR: NOT APPLICABLE
WORKING VOLTAGE: 335 VRMS MAX AT SEA LEVEL
DIELECTRIC WITHSTANDING VOLTAGE: 1000 VRMS MIN AT SEA LEVEL
INSULATION RESISTANCE: 1000 MEGOHM MIN
CONTACT RESISTANCE:
CENTER CONTACT - INITIAL 12 MILLIOHM MAX, AFTER ENVIRONMENTAL 16 MILLIOHM MAX
OUTER CONDUCTOR - GOLD PLATED INITIAL 1 MILLIOHM MAX, AFTER ENVIRONMENTAL NOT APPLICABLE
NICKEL PLATED INITIAL 2.5 MILLIOHM MAX, AFTER ENVIRONMENTAL NOT APPLICABLE
BRAID TO BODY - GOLD PLATING INITIAL 1 MILLIOHM MAX, NICKEL PLATING INITIAL 2.5 MILLIOHM MAX, AFTER ENVIRONMENTAL NOT APPLICABLE
CORONA LEVEL: 250 VOLTS MIN AT 70,000 FEET
INSERTION LOSS: NOT APPLICABLE
RF LEAKAGE: NOT APPLICABLE
RF HIGH POTENTIAL WITHSTANDING VOLTAGE: 700 VRMS AT 4 AND 7 MHZ

MECHANICAL:

ENGAGE/DISENGAGE TORQUE: 16 OUNCE-INCH MAX
MATING TORQUE: 35-50 OUNCE INCH
COUPLING PROOF TORQUE: 100 OUNCE-INCH MIN
COUPLING NUT RETENTION: 35 LBS MIN
CONTACT RETENTION: 4 LBS MIN AXIAL FORCE
CABLE ACCEPTABILITY: RG 179/U, RG 187/U
CABLE HEX CRIMP SIZE: .128
CABLE RETENSION: 20 LBS MIN OR CABLE BREAKING STRENGTH
DURABILITY: 500 CYCLES MIN

ENVIRONMENTAL:

(MEETS OR EXCEEDS THE APPLICABLE PARAGRAPH OF MIL-C-39012)
THERMAL SHOCK: MIL-STD-202, METHOD 107, CONDITION B
OPERATING TEMPERATURE: -65 DEG C TO 165 DEG C
CORROSION: MIL-STD-202, METHOD 101, CONDITION B
SHOCK: MIL-STD-202, METHOD 213, CONDITION C
VIBRATION: MIL-STD-202, METHOD 204, CONDITION D

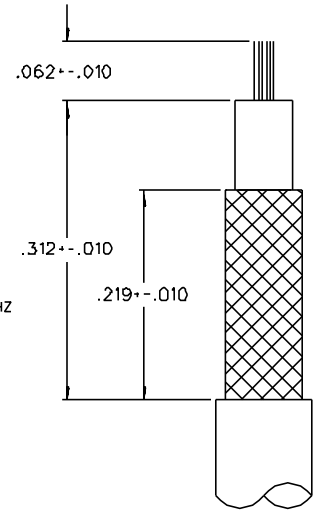

CABLE STRIP DIMENSIONS

DRAWING NO.					
C - 131-6433-101/110					
0	REVISIONS				
ENGINEERING RELEASE					
1	3-11-93	RH	JRK	TAK	RJB	PAH	3-19-93 ECO 41678
CHANGED: UPDATED GRAPHICS					
* REVISION NUMBER FOLLOWED BY AN ALPHA CHARACTER INDICATES DRAWING CLARIFICATION OR PART NUMBER ADDITION ONLY. *					
1a	12-19-94	RH	RRK	RAK	RJB		ECN 42972

CUSTOMER DRAWING

THIS DRAWING TO BE INTERPRETED PER ANSI Y 14.5M - 1982

"μSTATION"

COMPANY CONFIDENTIAL

TOLERANCE UNLESS OTHERWISE SPECIFIED		DRAWN BY JRK	DATE 1-18-93	JOHNSON	Cinch Connectivity Solutions 299 Johnson Ave. Ste. 100 Waseca, MN 56093 1-800-247-8256
DECIMALS .XX	mm	CHECKED BY	DATE	TITLE PLUG ASSEMBLY RA CABLED SMC, RG 179	
.XXX		APPROVED BY JRK	DATE 3-11-93		
MATL		APPROVED BY TAK/RJB	DATE 3-17-93	CODE NO.	DRAWING NO. C - 131-6433-101/110
FINISH		RELEASE DATE 3-19-93		SCALE 10:1	U/M INCH SHEET 2 OF 2