THIS DRAWING IS UNPUBLISHED. RELEASED FOR PUBLICATION 2000.
© COPYRIGHT 1998 BY TYCO ELECTRONICS CORPORATION. ALL RIGHTS RESERVED.

LOC	DIST
A1	–

REVISIONS

F	LTR	DESCRIPTION	DATE	DWN	APVD
	A2	Released as per ECR-08-016634	02.July.2008	SP	TS

PN 1-6

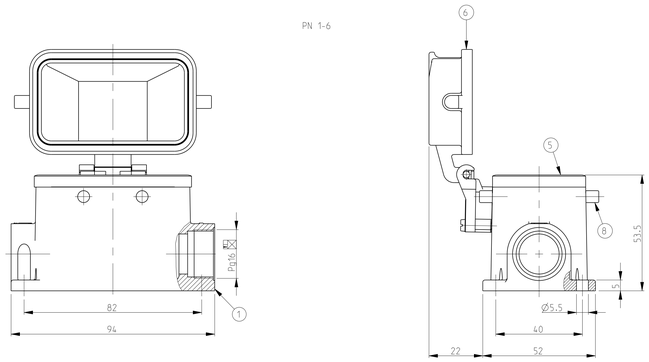

PN 2-2

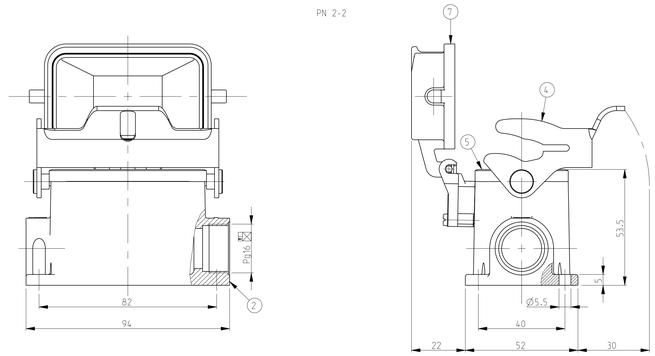

NOTES.

1 Material:Housing:Aluminium Diecasting Alloy
  Seals:Neoprene

2 Surface:Varnish grey
  -Aluminium Oxide +Varnish Black
  -Grey

3 Varnish on the inside not necessary

4 Packaging
  Quantity 5 Pieces in a box

PN 2-6

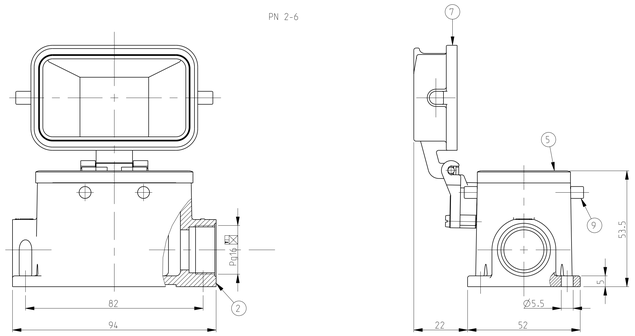

PN 1-2

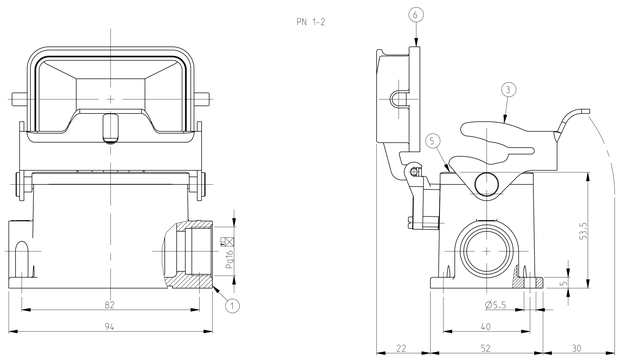

PN 1-6

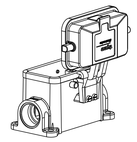

SCALE 1:2

PN 2-6

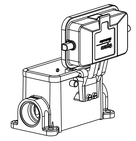

SCALE 1:2

PN 1-2

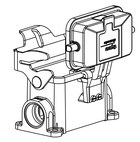

SCALE 1:2

PN 2-2

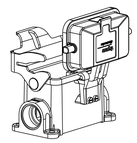

SCALE 1:2

2-2	1-2	2-6	1-6	DESCRIPTION	MATERIAL	SURFACE	COLOR	ITEM NO	REMARKS
			4	VS-Clip bolt	Stainless steel	Blank		9	
			4	VS-Clip bolt	Steel	Zinc plated	Blue	8	
	1		1	Cover HB-K	Aluminium	Aluminium oxide	Black	7	
		1	1	Cover HB	Aluminium		Grey	6	
1	1	1	1	Profile seal	Neoprene		Black	5	
1				LB-Side clip	Stainless steel	Blank		4	
	1			LB-Side clip	Steel	Zinc plated	Blue	3	
1		1		Surface mounted housing side entry HB-K	Aluminium	Aluminium oxide	Black	2	
	1		1	Surface mounted housing side entry HB	Aluminium		Grey	1	

ORDERING TEXT

HB-10.SGD.1.16.Z
HB-K.10.SGD.1.16.Z
HB.10.SGD-LB.1.16.Z
HB-K.10.SGD-LB.1.16.Z

"THIS DRAWING IS A CONVERTED TOOL DOCUMENT FOR INTERNATIONAL CORPORATION USE. THE DIMENSIONS, TOLERANCES AND SPECIFICATIONS HAVE BEEN CHECKED AND VALIDATED FOR THE LATEST REVISION."

DWN Schneider 30.04.03
CHK Schweiger 30.04.03
APVD –

Tyco Electronics
Tyco Electronics AMP GmbH
D-53819 Neunkirchen, Germany

DIMENSIONS: mm

TOLERANCES UNLESS OTHERWISE SPECIFIED:
ANGLES ±0°30'
LEN MM MM
0 PLC ±1
1 PLC ±.5
2 PLC ±.25
3 PLC ±.13
4 PLC ±.05
ANGLES ±

PRODUCT SPEC –
APPLICATION SPEC –

NAME: Surface mounted housing side entry HB.10.SGD.1.16.Z

MATERIAL
FINISH
WEIGHT –

SIZE	CAGE CODE	DRAWING NO	RESTRICTED TO
A0	00779	C-1102286	–

CUSTOMER DRAWING | SCALE 1:1 | SHEET 1 OF 1 | REV A2

AMP 4806 REV 31MAR2000
Pro-ENGINEER DRAWING