REVISIONS				
REV.	ECN	DESCRIPTION	DATE	APPROVED
K		TOLERANCE ADDED TO 13.78	APR 16/08	ZLJ

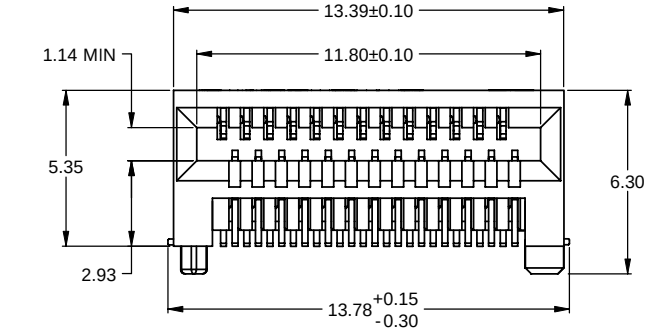

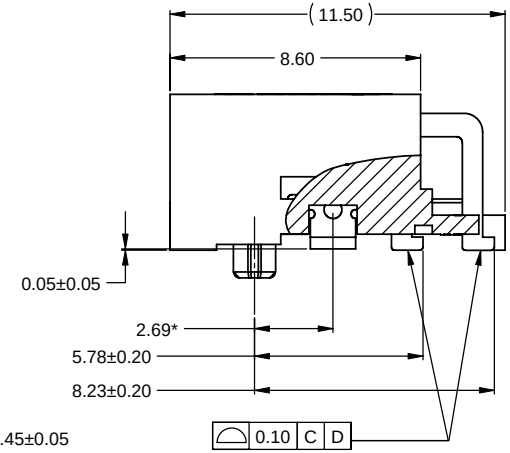

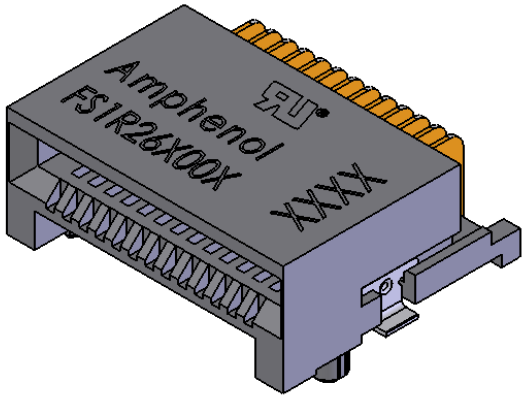

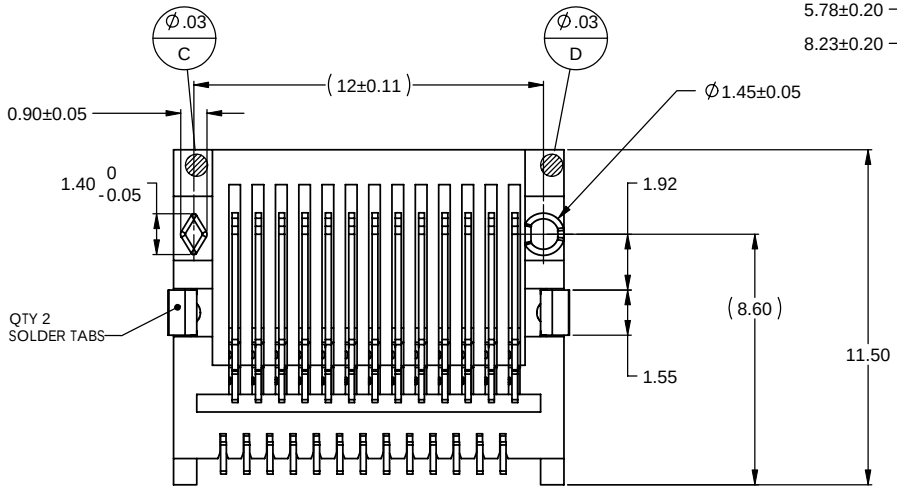

PART NUMBER	PACKAGING	CONTACT PLATING
FS1-R26-2001	TAPE AND REEL	30µ" GOLD OVER 50µ" NICKEL IN CONTACT AREAS 100µ" MATTE TIN OVER 50µ" NICKEL IN SOLDER AREAS
FS1-R26-3001		15µ" GOLD OVER 50µ" NICKEL IN CONTACT AREAS 100µ" MATTE TIN OVER 50µ" NICKEL IN SOLDER AREAS

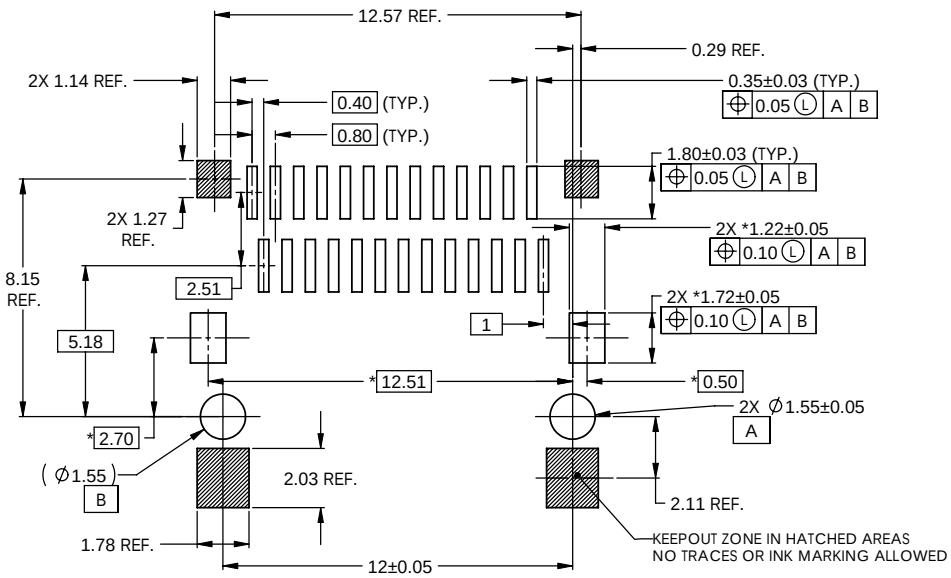

RECOMMENDED PCB LAYOUT

NOTES:

1) MATERIAL:

HOUSING: SOLDER REFLOW PROCESS COMPATIBLE LCP, UL94V-0

CONTACTS: PHOSPHOR BRONZE

2) ROHS COMPLIANT

3) SOLDER TAB PLATING:
50 - 75 MICROINCHES OF NICKEL UNDER PLATE ALL OVER
100 - 150 MICROINCHES OF NO WHISKER MATTE TIN.

4) PERFORMANCE:

ELECTRICAL: 0.5 AMPS MAX. PER CONTACT

MECHANICAL: 250 MATING CYCLES MINIMUM

5) COMPLIES WITH SFF-8086 EXCEPT WHERE NOTED "*"

DO NOT SCALE DRAWING

THIS DOCUMENT CONTAINS PROPRIETARY INFORMATION AND SUCH INFORMATION MAY NOT BE DISCLOSED TO OTHERS FOR ANY PURPOSE OR USED FOR MANUFACTURING PURPOSES WITHOUT PERMISSION FROM AMPHENOL CANADA CORP.

UNLESS OTHERWISE SPECIFIED DIMENSIONS ARE IN MILIMETERS TOLERANCES ARE: DECIMALS .X± 0.25 .XX± 0.13 ANGLES ± 2°	APPROVALS	DATE	Amphenol Canada Corp.
MATERIAL AND FINISH	DRAWN YK	28/SEP/06	TITLE SFF, 26 POSITION RECPT., WITH SOLDER TABS
	DESIGNED YK	28/SEP/06	
	CHECKED		
	QA APP'D		
ENG.REL.NO. EAR	E APP'D		SIZE C DWG. NO. P-FS1-R26-X001 REV. K
CODE IDENT. NO. 03554	DWG APP'D		SCALE NTS PROJECT SFF SHEET 1 OF 1