MODEL NO.	PACKAGING
147-0901-901	ONE PCS PER BAG

REV	ECO	DATE
001	ECO-17-0032	11/28/2017

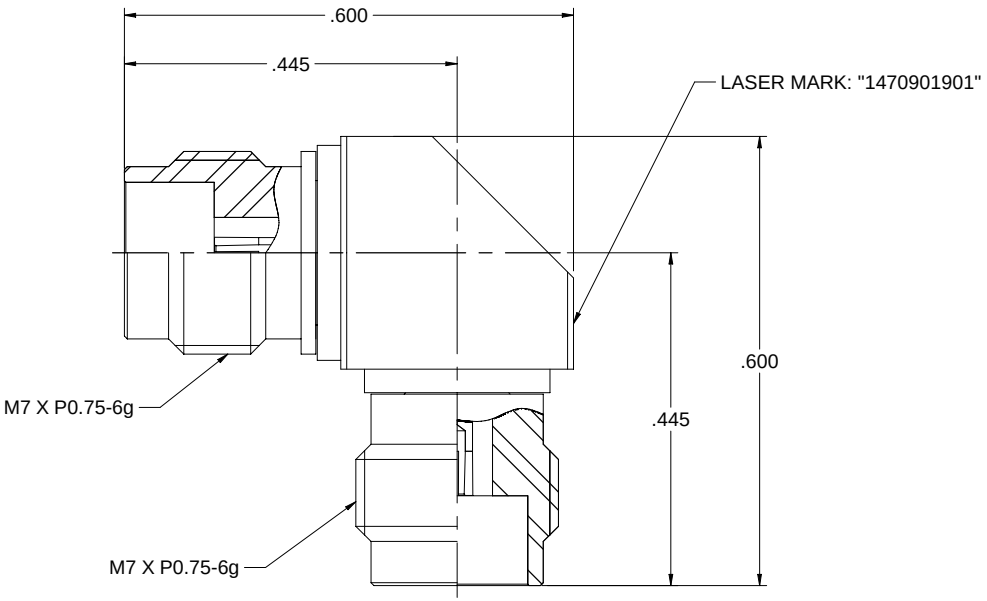

NOTES: UNLESS OTHERWISE SPECIFIED

1. MATERIAL & FINISH:
   1.1 BODY: PASSIVATED STAINLESS STEEL
   1.2 CONTACT PIN : GOLD PLATED BERYLLIUM COPPER
   1.3 INSULATOR: ULTEM 1000 AMBER

2. ELECTRICAL:
   2.1 IMPEDANCE: 50 OHMS
   2.2 FREQUENCY RANGE: 0-50 GHz
   2.3 VOLTAGE STANDING WAVE RATIO: 1.2 MAX
   2.4 DIELECTRIC WITHSTADING VOLTAGE: 500 VRMS MIN
   2.5 CONTACT RESISTANCE:
      2.5.1 CENER CONTACT: 4 MILLIOHM MAX
      2.5.2 OUTER CONTACT: 2.5 MILLIOHM MAX
   2.6 INSULATION RESISTANCE: 5000 MOHM MIN

3. MECHANICAL:
   3.1 ENGAGEMENT/ DISENGAGEMENT FORCE: 0.23 NM MAX
   3.2 DURABILITY: 500 CYCLES MIN

4. ENVIRONMENT:
   4.1 THERMAL SHOCK: MIL-STD-202, METHOD 107, CONDITION B.
   4.2 OPERATING TEMPERATURE: -55 TO 125°C
   4.3 SALT SPRAY: MIL-STD-202, METHOD 101, CONDITION B
   4.4 SHOCK: MIL-STD-202, METHOD 213, CONDITION I
   4.5 VIBRATION: MIL-STD-202, METHOD 204, CONDITION D
   4.6 MOISTURE RESISTANCE: MIL-STD-202, METHOD 106

cinch connectivity solutions

This PROPRIETARY Document is property of Cinch Connectivity Solutions. Unauthorized use, reproduction or disclosure is prohibited. The information contained herein is to be used only for the purpose for which it is submitted and is not to be released, in whole or in part, without prior written permission.

INTERPRET DIMENSIONS IN ACCORDANCE WITH ASME Y14.5-2009.

Model No. 147-0901-901

RoHS2 2011/65/EU

UNLESS OTHERWISE SPECIFIED UNITS INCH

.XXX ±.02
.XXXX ±.01
ANGLES ±5°

Cage Code

3RD ANGLE PROJECTION

Drawn by: Betty.Yu

Date: 10/19/2017

Johnson

Title: ADAPTER ASSEMBLY, R/A JACK TO JACK,2.4mm

Drawing No. 147-0901-901

Rev. 001

Size C

DO NOT SCALE DRAWING

Workmanship Std: NONE

Sheet 1 of 1