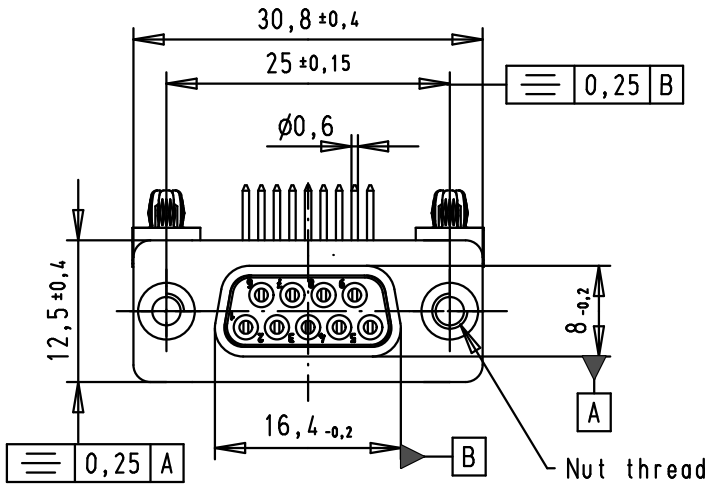

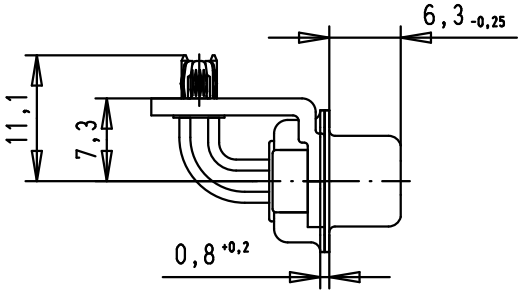

SPECIFICATION

Performance level	PL2
Filter type	C
Capacitance	3900pf±20%
Working Voltage	100v
Current Rating	7.5A
Insulation Resistance	>1GΩ

FREQUENCY (MHz)	ATTENUATION (dB)
5	6dB
10	11dB
50	25dB
100	35dB
500	35dB
1000	32dB

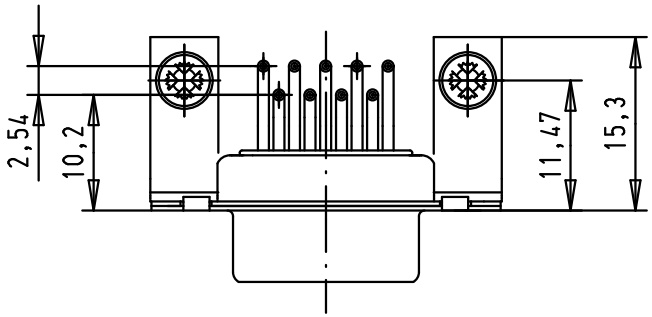

PCB Layout, Component side, thickness 1.6 mm

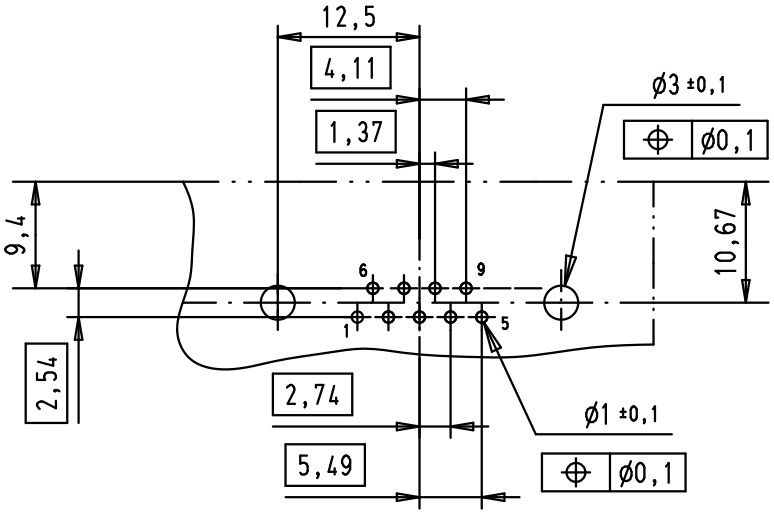

			36283	12/01/12	SD
09641147243	M3		33231	07/10/05	JMDR
09641147242	UNC 4-40		31058	8-JUL-02	CV
Part number	Nut thread		Mod.	Dat.	Name

	Dat.	Name
Detail.	8-JUL-02	CV
Insp.	12/01/12	JB
Stand.		

All Dim. in mm
Orig. Size DIN A 4

D-Sub, female, angled, 9 Poles, solder pins, board-locks and clinch nuts

Ma?Mstab/ Scale: 1.5:1

HARTING EURL
F-95972 Paris

TB 0964114724x

Sub.

Blatt/ Page 1/4