THIS DRAWING IS UNPUBLISHED. RELEASED FOR PUBLICATION -,- .
© COPYRIGHT 2010 BY TYCO ELECTRONICS CORPORATION. ALL RIGHTS RESERVED.

LOC DW DIST —

REVISIONS

P	LTR	DESCRIPTION	DATE	DWN	APVD
	D	REVISED (ECR-12-013695) SHELL CHANGE TO TYPE B FOR 1734795-4	16AUG'12	E.L.	W.K.

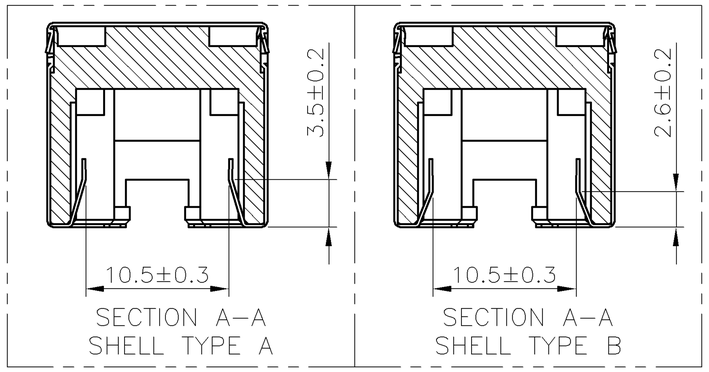

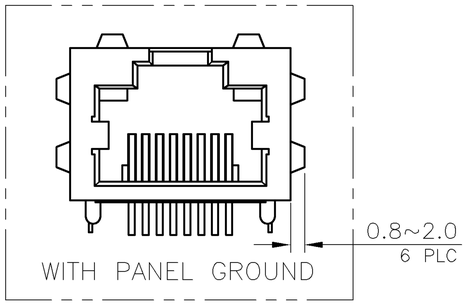

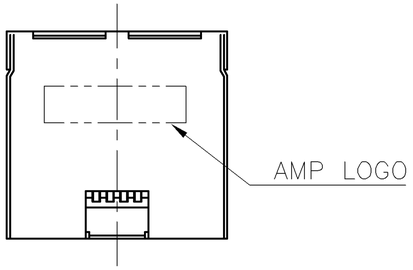

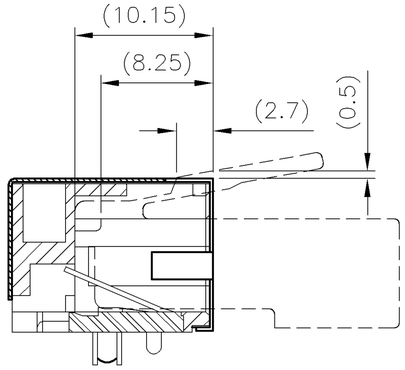

MATING WITH RJ-45 PLUG
(REFERENCE)

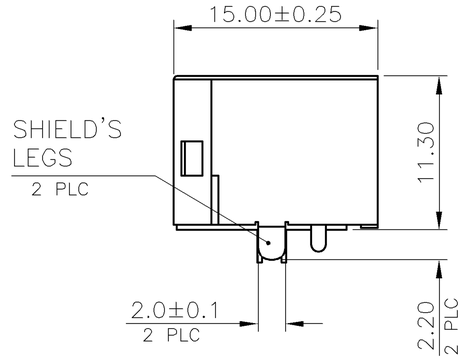

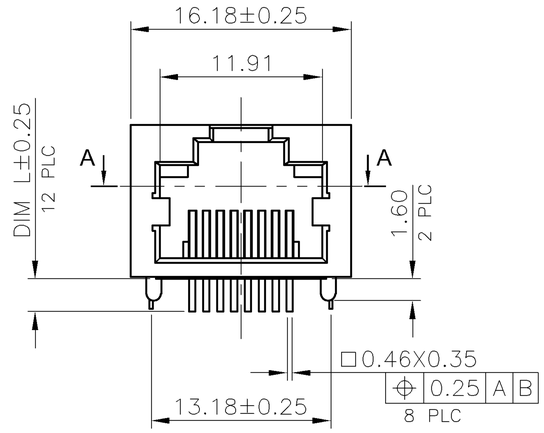

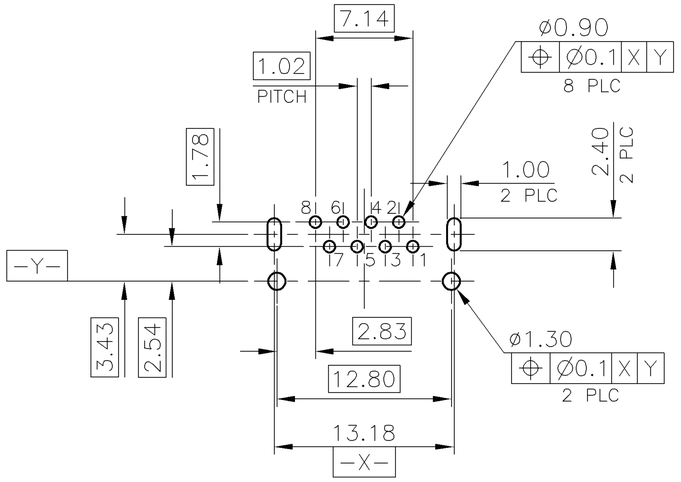

RECOMMENDED PCB LAYOUT (THICKNESS: 1.6MM)
(DIMENSION TOLERANCE: 1 PLC: ±0.1, 2 PLC:±0.05)

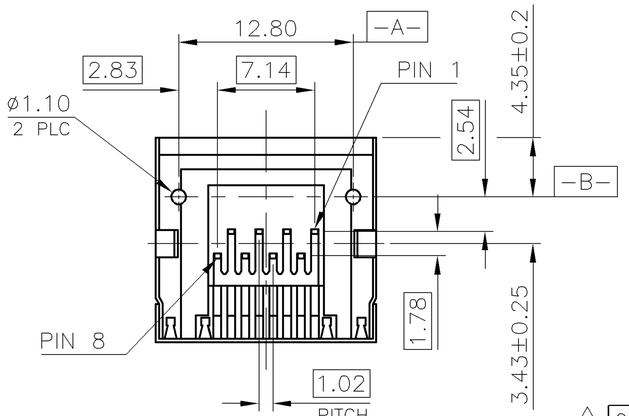

NOTE:
1. MATERIAL:
   1.1 HOUSING: PA9T WITH 30% GF, UL 94V-0, BLACK COLOR.
   1.2 CONTACTS: PHOSPHOR BRONZE.
   1.3 SHELL: BRASS.
2. FINISH:
   2.1 CONTACTS:
      (SEE TABLE) GOLD PLATED ON CONTACT AREA.
      GOLD FLASH ON SOLDER TAIL.
      1.27um [50u"] MIN. NICKEL UNDERPLATED OVERALL.
   2.2 SHELL: 0.51um [20u"] MIN. NICKEL PLATED.
3. WAVE SOLDER CAPABLE TO 265°C PER TYCO TEST SPEC. 109-202, CONDITION B.
4. OBSOLETE PART : OBSOLETE CIS STREAMLINING PER D.RENAUD/D.SINISI

PACKAGE TYPE	PANEL GROUND	LED	SHELL TYPE	DIM L	MIN. GOLD THICKNESS	PART NUMBER
TAPE & REEL	W/O	W/O	TYPE A	2.2	6u"	3-1734795-2
				1.5	6u"	3-1734795-1
TRAY	W/			2.4	50u"	1734795-8
					30u"	1734795-7
					15u"	1734795-6
					6u"	1734795-5
	W/O		TYPE B		50u"	1734795-4
			TYPE A		30u"	1734795-3
					15u"	~~1734795-2~~
					6u"	1734795-1

4 OBSOLETE

THIS DRAWING IS A CONTROLLED DOCUMENT.

DIMENSIONS: mm

TOLERANCES UNLESS OTHERWISE SPECIFIED:

0 PLC	± -
1 PLC	± 0.3
2 PLC	± 0.2
3 PLC	± 0.15
4 PLC	± -
ANGLES	± 3°

MATERIAL: SEE NOTE
FINISH: SEE NOTE

DWN O. HU 14SEP2007
CHK S. HOU 14SEP2007
APVD W.J. KE 14SEP2007
PRODUCT SPEC 108-57535
APPLICATION SPEC —
WEIGHT 3.5 GRAMS
CUSTOMER DRAWING

TE Connectivity

NAME
MODULAR JACK CONNECTOR
RJ45, 8P8C, SHIELDED
TAB UP, DIP TYPE, H=11.3mm

SIZE A3 | CAGE CODE 00779 | DRAWING NO C-1734795 | RESTRICTED TO —
SCALE — | SHEET 1 OF 5 | REV D

1470-19 (1/08)

THIS DRAWING IS UNPUBLISHED. RELEASED FOR PUBLICATION -,- .
© COPYRIGHT 2010 BY TYCO ELECTRONICS CORPORATION. ALL RIGHTS RESERVED.

LOC	DIST
DW	—

REVISIONS

P	LTR	DESCRIPTION	DATE	DWN	APVD
		SEE SHEET 1.			

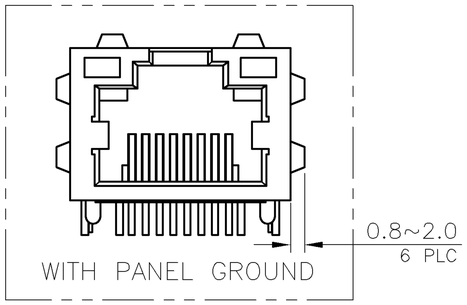

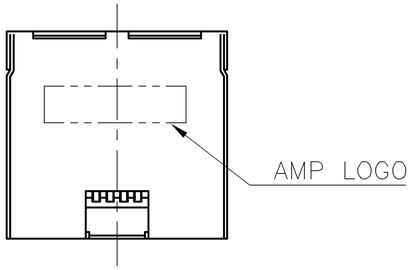

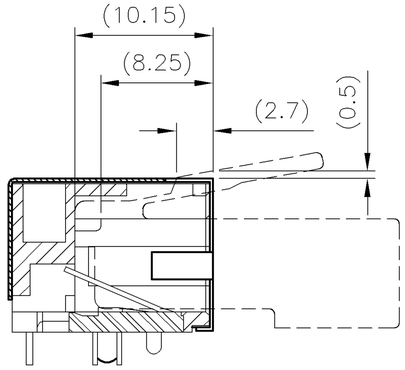

MATING WITH RJ-45 PLUG
(REFERENCE)

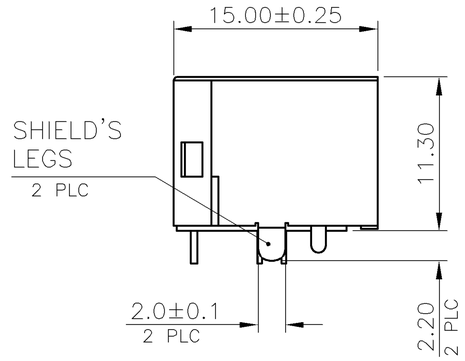

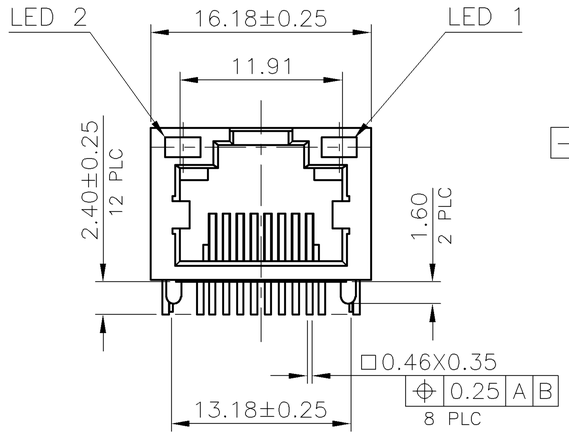

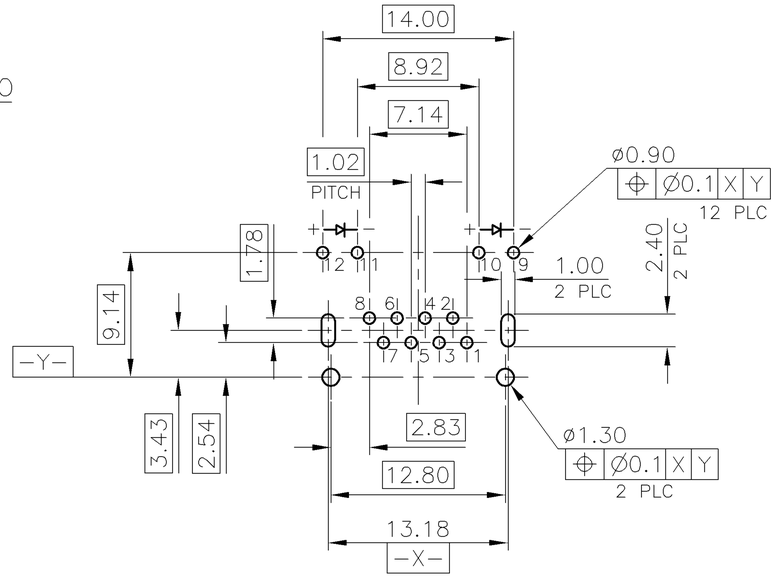

RECOMMENDED PCB LAYOUT (THICKNESS: 1.6MM)
(DIMENSION TOLERANCE: 1 PLC: ±0.1, 2 PLC:±0.05)

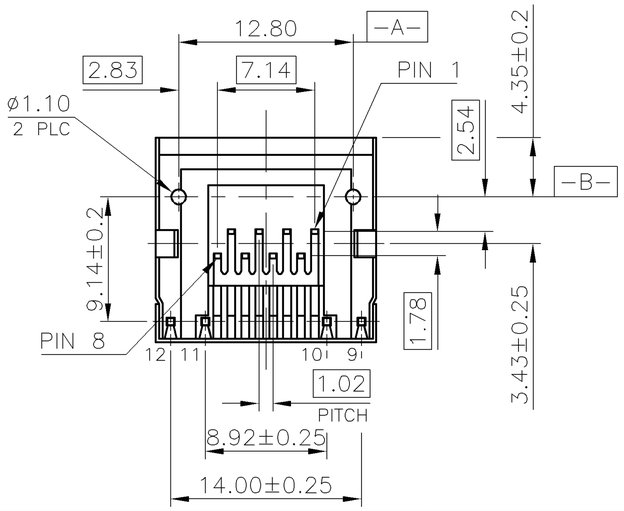

NOTE:
1. MATERIAL:
   1.1 HOUSING: PA9T WITH 30% GF, UL 94V-0, BLACK COLOR.
   1.2 CONTACTS: PHOSPHOR BRONZE.
   1.3 SHELL: BRASS.
   1.4 LED LIGHT: EPOXY RESIN & STEEL
2. FINISH:
   2.1 CONTACTS:
      (SEE TABLE) GOLD PLATED ON CONTACT AREA.
      GOLD FLASH ON SOLDER TAIL.
      1.27um [50u"] MIN. NICKEL UNDERPLATED OVERALL.
   2.2 SHELL: 0.51um [20u"] MIN. NICKEL PLATED.
   2.3 LED: 1.02um [40u"] COPPER UNDERPLATED OVERALL.
      1.27um [50u"] NICKEL OVERALL.
      1.27um [50u"] SILVER ON BONDING AREA.
      2.54um [100u"] BRIGHT-TIN ON SOLDER AREA.
3. WAVE SOLDER CAPABLE TO 265°C PER TYCO TEST SPEC. 109-202, CONDITION B.
4. OBSOLETE PART : OBSOLETE CIS STREAMLINING PER D.RENAUD/D.SINISI

PANEL GROUND	LED 2	LED 1	MIN. GOLD THICKNESS	PART NUMBER
	LED'S COLOR			
W/	GREEN	GREEN	15u"	2-1734795-2
	ORANGE	YELLOW	50u"	1-1734795-8
			30u"	1-1734795-7
			15u"	1-1734795-6
			6u"	1-1734795-5
W/O	YELLOW	GREEN	50u"	1-1734795-4
			30u"	1-1734795-3
			15u"	~~1-1734795-2~~
			6u"	1-1734795-1

4 OBSOLETE

THIS DRAWING IS A CONTROLLED DOCUMENT.

DIMENSIONS: mm

TOLERANCES UNLESS OTHERWISE SPECIFIED:

0 PLC	± -
1 PLC	± 0.3
2 PLC	± 0.2
3 PLC	± 0.15
4 PLC	± -
ANGLES	± 3°

MATERIAL: SEE NOTE
FINISH: SEE NOTE

DWN —
CHK —
APVD —
PRODUCT SPEC —
APPLICATION SPEC —
WEIGHT 3.5 GRAMS

TE Connectivity

NAME
MODULAR JACK CONNECTOR
RJ45, 8P8C, SHIELDED
TAB UP, DIP TYPE, H=11.3mm

SIZE	CAGE CODE	DRAWING NO	RESTRICTED TO
A3	00779	C-1734795	—

CUSTOMER DRAWING | SCALE — | SHEET 2 OF 5 | REV D

THIS DRAWING IS UNPUBLISHED. RELEASED FOR PUBLICATION – , – .
© COPYRIGHT 2010 BY TYCO ELECTRONICS CORPORATION. ALL RIGHTS RESERVED.

LOC	DIST
DW	—

REVISIONS

P	LTR	DESCRIPTION	DATE	DWN	APVD
		SEE SHEET 1.			

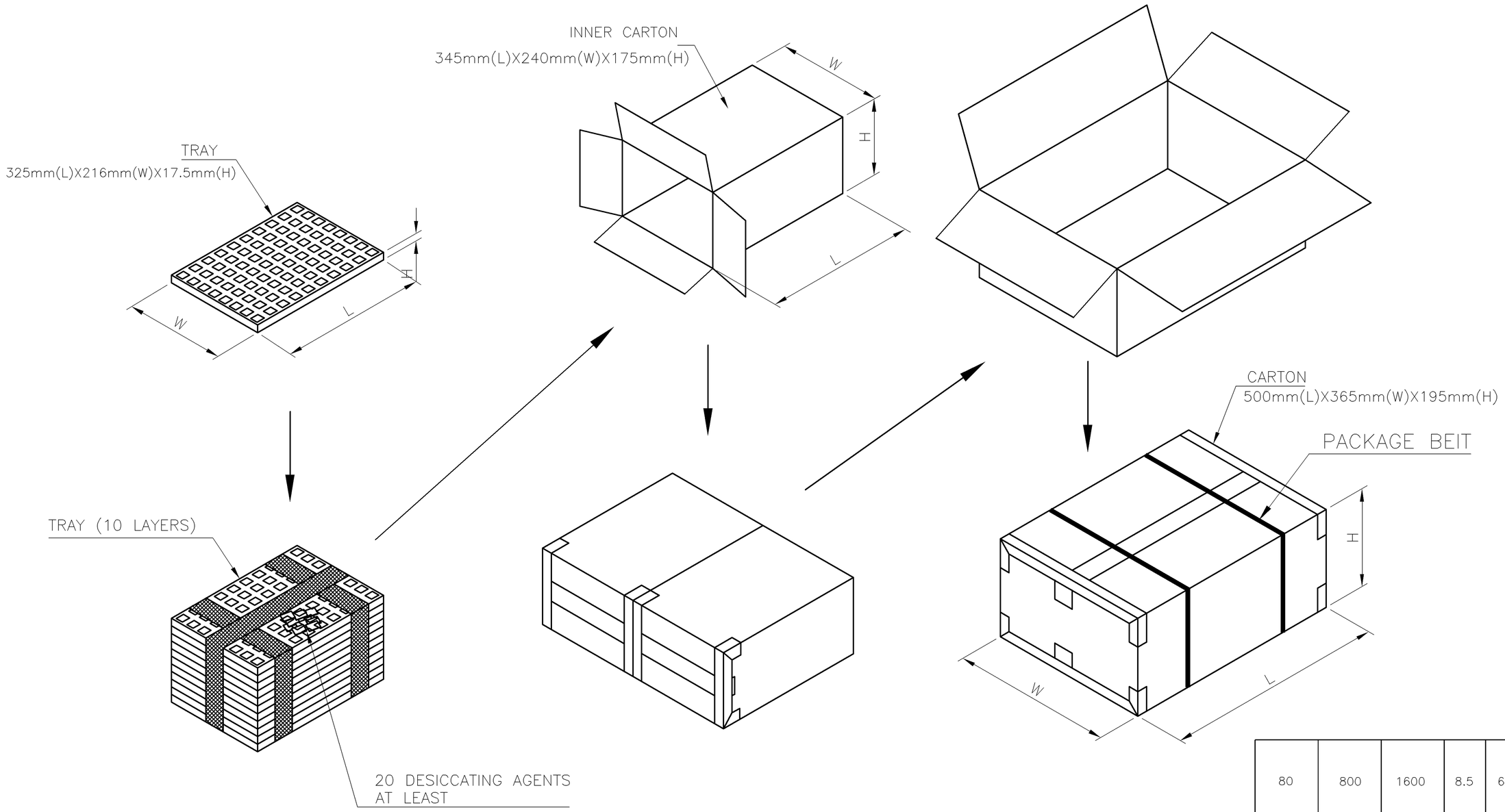

PCS/ TRAY	TRAYS/ CARTON	QUANTITY (PCS)	G/W (Kg)	N/W (Kg)	PART NUMBER
80	800	1600	8.5	6.5	1734795–4
					1734795–3
					△4 ~~1734795–2~~
					1734795–1

THIS DRAWING IS A CONTROLLED DOCUMENT.

DIMENSIONS: mm

TOLERANCES UNLESS OTHERWISE SPECIFIED:

0 PLC	± –
1 PLC	± 0.3
2 PLC	± 0.2
3 PLC	± 0.15
4 PLC	± –
ANGLES	± 3°

MATERIAL –

FINISH –

DWN –
CHK –
APVD –
PRODUCT SPEC –
APPLICATION SPEC –
WEIGHT –

TE Connectivity

NAME

MODULAR JACK CONNECTOR
RJ45, 8P8C, SHIELDED
TAB UP, DIP TYPE, H=11.3mm

SIZE	CAGE CODE	DRAWING NO	RESTRICTED TO
A3	00779	C–1734795	—

CUSTOMER DRAWING | SCALE — | SHEET 3 OF 5 | REV D

1470–19 (1/08)

THIS DRAWING IS UNPUBLISHED. RELEASED FOR PUBLICATION – , – .
© COPYRIGHT 2010 BY TYCO ELECTRONICS CORPORATION. ALL RIGHTS RESERVED.

LOC	DIST
DW	—

REVISIONS

P	LTR	DESCRIPTION	DATE	DWN	APVD
		SEE SHEET 1.			

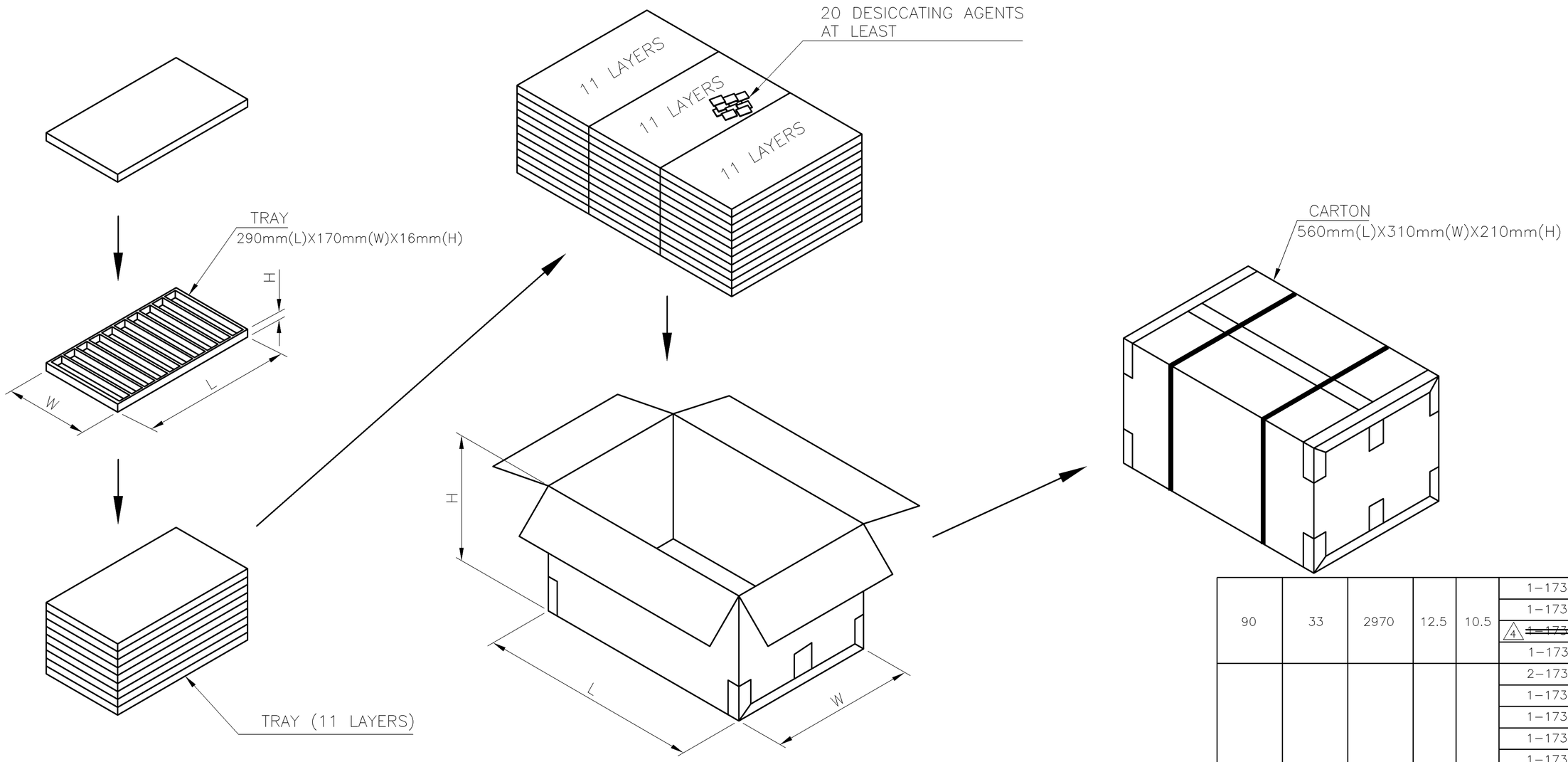

PCS/ TRAY	TRAYS/ CARTON	QUANTITY (PCS)	G/W (Kg)	N/W (Kg)	PART NUMBER
90	33	2970	12.5	10.5	1–1734795–4
					1–1734795–3
					4 ~~1–1734795–2~~
					1–1734795–1
80	33	2640	11	9	2–1734795–2
					1–1734795–8
					1–1734795–7
					1–1734795–6
					1–1734795–5
					1734795–8
					1734795–7
					1734795–6
					1734795–5

THIS DRAWING IS A CONTROLLED DOCUMENT.

DIMENSIONS: mm

TOLERANCES UNLESS OTHERWISE SPECIFIED:

0 PLC	± –
1 PLC	± 0.3
2 PLC	± 0.2
3 PLC	± 0.15
4 PLC	± –
ANGLES	± 3°

MATERIAL –

FINISH –

DWN –
CHK –
APVD –
PRODUCT SPEC –
APPLICATION SPEC –
WEIGHT –

CUSTOMER DRAWING

TE Connectivity

NAME

MODULAR JACK CONNECTOR
RJ45, 8P8C, SHIELDED
TAB UP, DIP TYPE, H=11.3mm

SIZE	CAGE CODE	DRAWING NO	RESTRICTED TO
A3	00779	C–1734795	–

SCALE	SHEET	REV
–	4 OF 5	D

THIS DRAWING IS UNPUBLISHED. RELEASED FOR PUBLICATION -,- .
© COPYRIGHT 2010 BY TYCO ELECTRONICS CORPORATION. ALL RIGHTS RESERVED.

LOC	DIST
DW	—

REVISIONS

P	LTR	DESCRIPTION	DATE	DWN	APVD
		SEE SHEET 1.			

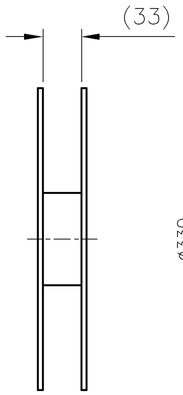

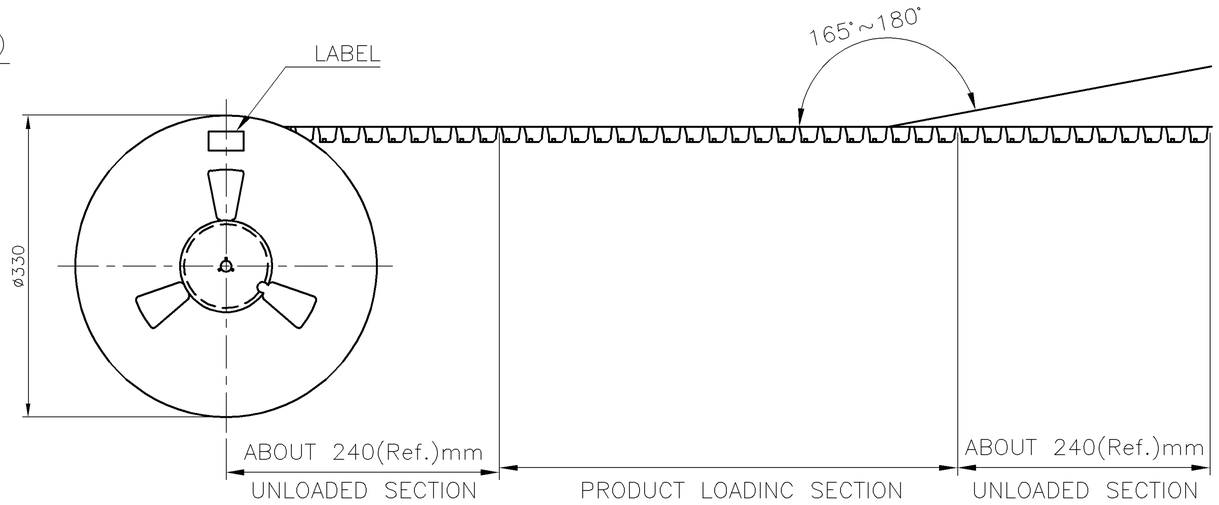

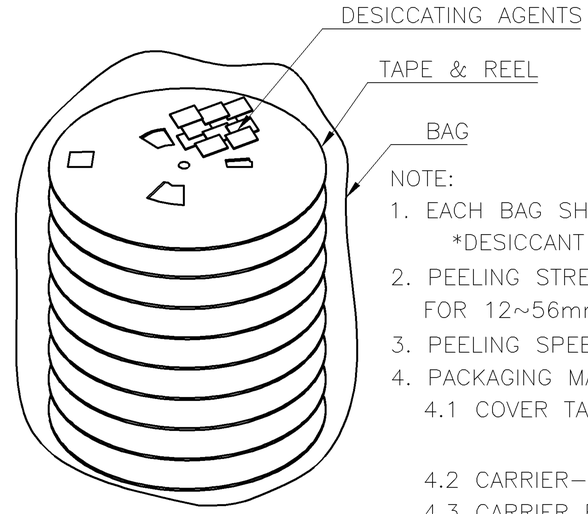

NOTE:
1. EACH BAG SHALL BE INCLUDED:
   *DESICCANT
2. PEELING STRENGTH: 0.1~1.3N(1~130 GRAMS) FOR 12~56mm WIDE CARRIER TAPES
3. PEELING SPEED: 300mm/MINUTES.
4. PACKAGING MATERIAL:
   4.1 COVER TAPE–COMPOSITE OF POLYETHYLENE TEREPHTHALATE (PET)
   4.2 CARRIER–POLYSTYRENE (PS)
   4.3 CARRIER REEL–POLYSTYRENE

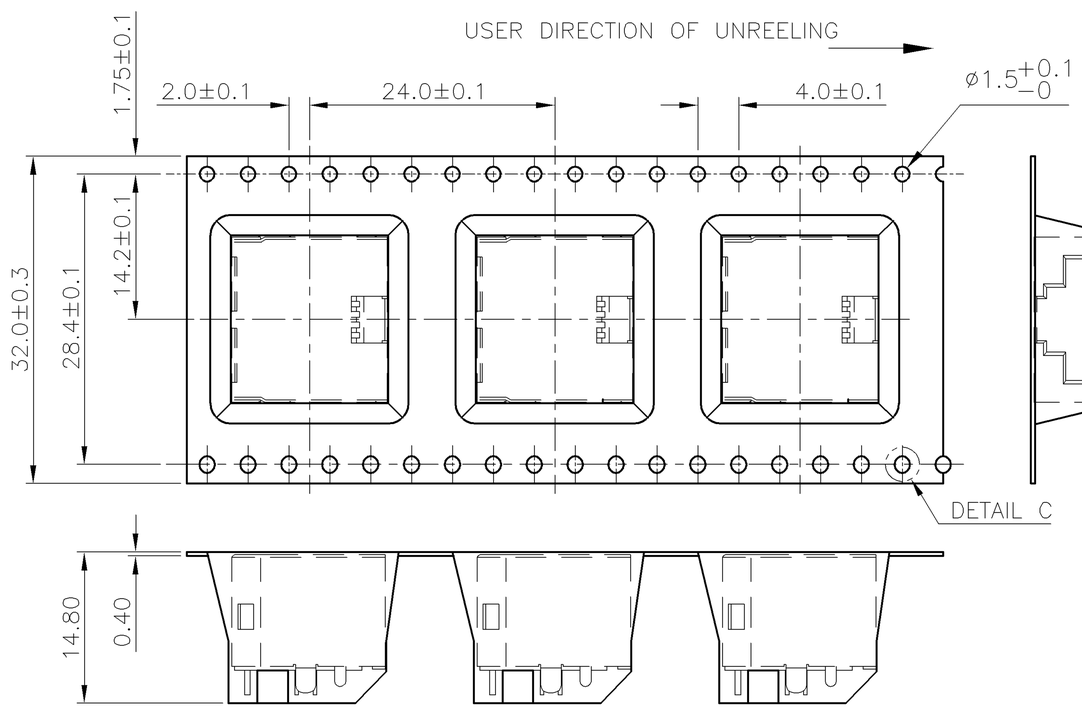

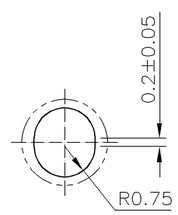

DETAIL C
SCALE 4:1

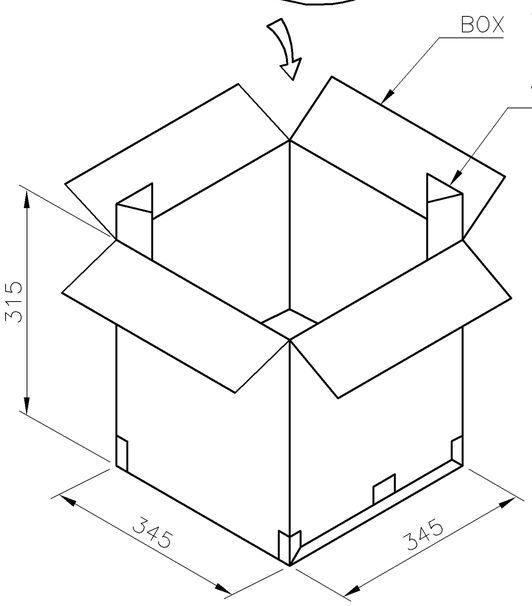

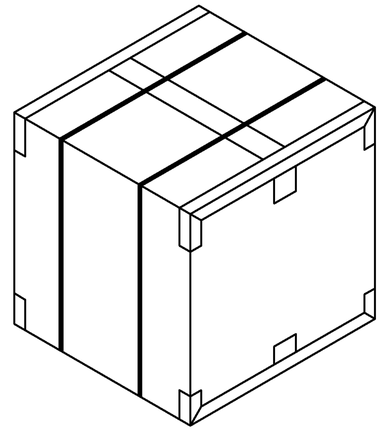

GROSS WEIGHT	NET WEIGHT	PCS/ REEL	REEL/ BOX	PCS/ BOX	PART NUMBER
8.7 KG	5.05 KG	180	8	1440	3–1734795–2 3–1734795–1

THIS DRAWING IS A CONTROLLED DOCUMENT.

DIMENSIONS: mm

TOLERANCES UNLESS OTHERWISE SPECIFIED:

0 PLC	± –
1 PLC	± 0.3
2 PLC	± 0.2
3 PLC	± 0.15
4 PLC	± –
ANGLES	± 3°

MATERIAL –

FINISH –

DWN –
CHK –
APVD –
PRODUCT SPEC –
APPLICATION SPEC –
WEIGHT –

TE Connectivity

NAME
MODULAR JACK CONNECTOR
RJ45, 8P8C, SHIELDED
TAB UP, DIP TYPE, H=11.3mm

SIZE	CAGE CODE	DRAWING NO	RESTRICTED TO
A3	00779	C–1734795	—

CUSTOMER DRAWING | SCALE — | SHEET 5 OF 5 | REV D